F132-P

BATCH-CONTROLLER

WITH RECEIPT PRINTER DRIVER

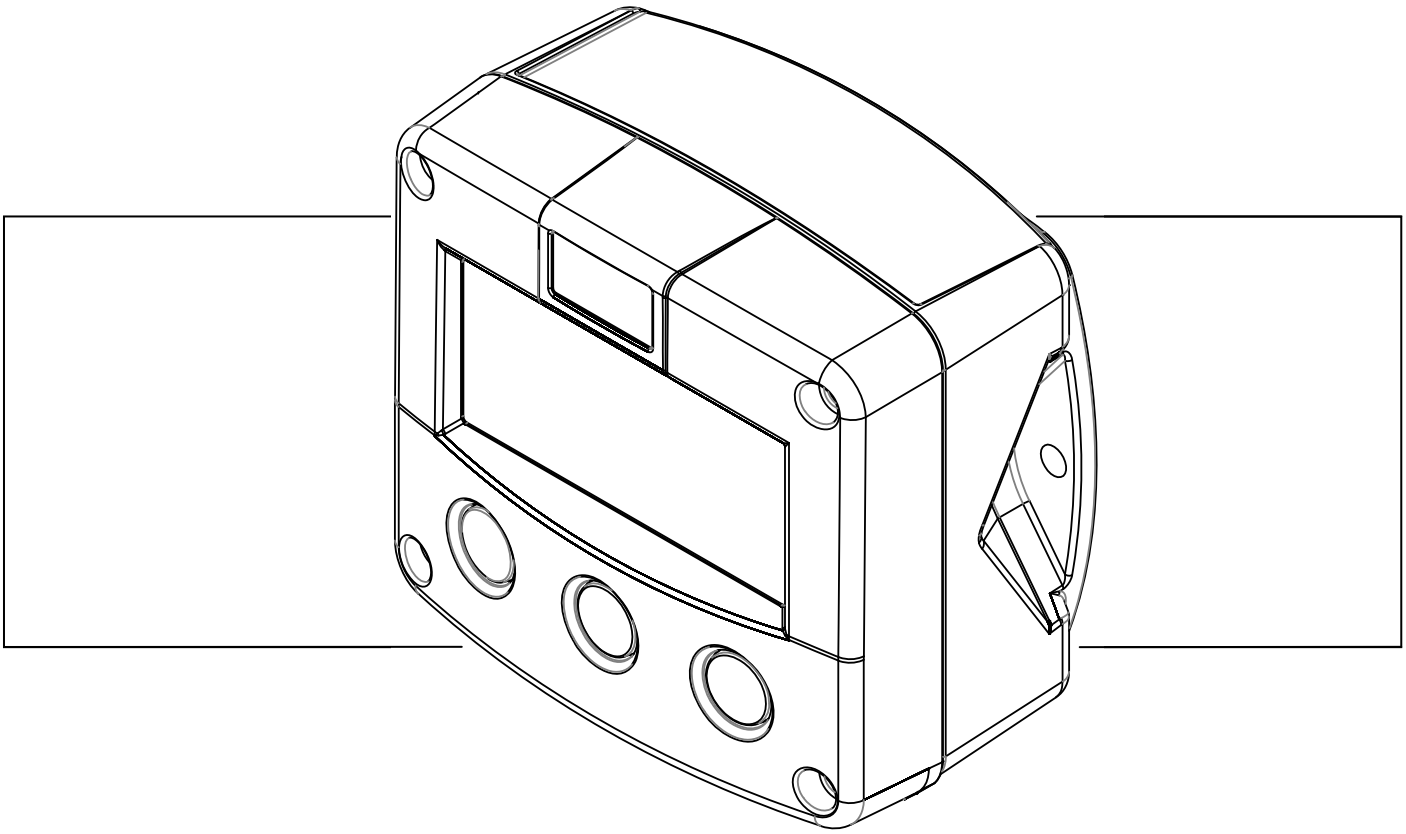

Signal input flowmeter type P: pulse, Namur and coil

Status inputs: start and stop

Control output: two control outputs for one- and two-stage control

Communication: Printer interface for receipt printing

Options: Intrinsically Safe

SAFETY INSTRUCTIONS

- *Any responsibility is lapsed if the instructions and procedures as described in this manual are not followed.*
- *LIFE SUPPORT APPLICATIONS: The F132-P is not designed for use in life support appliances, devices, or systems where malfunction of the product can reasonably be expected to result in a personal injury. Customers using or selling these products for use in such applications do so at their own risk and agree to fully indemnify the manufacturer and supplier for any damages resulting from such improper use or sale.*
- *Electro static discharge does inflict irreparable damage to electronics! Before installing or opening the unit, the installer has to discharge himself by touching a well-grounded object.*
- *This unit must be installed in accordance with the EMC guidelines (Electro Magnetic Compatibility).*
- *Do connect a proper grounding to the aluminum casing as indicated if the F132-P has been supplied with the 115-230V AC power-supply type PM. The green / yellow wire between the back-casing and removable terminal-block may never be removed.*
- *Intrinsically Safe applications: follow the instructions as mentioned in Chapter 5 and consult "Fluidwell F1..-..-XI - Documentation for Intrinsic Safety".*

DISPOSAL

At the end of its life this product should be disposed of according to local regulations regarding waste electronic equipment. If a battery is present in this product it should be disposed of separately. The separate collection and recycling of your waste equipment will help to conserve natural resources and ensure that it is recycled in a manner that protects the environment.

SAFETY RULES AND PRECAUTIONARY MEASURES

- The manufacturer accepts no responsibility whatsoever if the following safety rules and precautions instructions and the procedures as described in this manual are not followed.
- Modifications of the F132-P implemented without preceding written consent from the manufacturer, will result in the immediate termination of product liability and warranty period.
- Installation, use, maintenance and servicing of this equipment must be carried out by authorized technicians.
- Check the mains voltage and information on the manufacturer's plate before installing the unit.
- Check all connections, settings and technical specifications of the various peripheral devices with the F132-P supplied.
- Open the casing only if all leads are free of potential.
- Never touch the electronic components (ESD sensitivity).
- Never expose the system to heavier conditions than allowed according to the casing classification (see manufacture's plate and chapter 4.2.).
- If the operator detects errors or dangers, or disagrees with the safety precautions taken, then inform the owner or principal responsible.
- The local labor and safety laws and regulations must be adhered to.

ABOUT THE OPERATION MANUAL

This operation manual is divided into two main sections:

- The daily use of the unit is described in chapter 2 "Operation". These instructions are meant for users.
- The following chapters and appendices are exclusively meant for electricians/technicians. These provide a detailed description of all software settings and hardware installation guidance.

This operation manual describes the standard unit as well as most of the options available. For additional information, please contact your supplier.

A hazardous situation may occur if the F132-P is not used for the purpose it was designed for or is used incorrectly. Please carefully note the information in this operating manual indicated by the pictograms:

WARNING

A "**warning**" indicates actions or procedures which, if not performed correctly, may lead to personal injury, a safety hazard or damage of the F132-P or connected instruments.

Caution !

A "**caution**" indicates actions or procedures which, if not performed correctly, may lead to personal injury or incorrect functioning of the F132-P or connected instruments.

Note !

A "**note**" indicates actions or procedures which, if not performed correctly, may indirectly affect operation or may lead to an instrument response which is not planned.

Hardware version	:	02.01.xx
Software version	:	02.05.xx
Manual	:	HF132PEN_v0501_05
© Copyright 2011	:	Fluidwell bv - The Netherlands.

Information in this manual is subject to change without prior notice. The manufacturer is not responsible for mistakes in this material or for incidental damage caused as a direct or indirect result of the delivery, performance or use of this material.

© All rights reserved. No parts of this publication may be reproduced or used in any form or by any means without written permission of your supplier.

CONTENTS MANUAL

Safety instructions 2
Disposal 2
Safety rules and precautionary measures 2
About the operation manual 3
Contents manual 4
1. Introduction 5
1.1. System description of the F132-P 5
2. Operational 7
2.1. General 7
2.2. Control panel 7
2.3. Operator information and functions 7
2.4 Operator Alarms 9
3. Configuration 10
3.1. Introduction 10
3.2. Programming SETUP-level 10
3.2.1. General 10
3.2.2. Overview functions SETUP level 13
3.2.3. Explanation OF SETUP-functions 14
1 - Preset 14
2 - Overrun 15
3 - Alarm 15
4 - Display 15
5 - Power management 15
6 - Flowmeter 16
7 - Relay output 16
8 – Print settings 16
9 - Others 17
4. Installation 18
4.1. General directions 18
4.2. Installation / surrounding conditions 18
4.3. Dimensions- Enclosure 19
4.4. Installing the hardware 21
4.4.1. Introduction 21
4.4.2. Voltage selection sensor supply 22
4.4.3. Terminal connectors 23
5. Intrinsically safe applications 29
5.1. General information and instructions 29
5.2. Terminal connectors Intrinsically Safe applications 30
5.3. Configuration examples Intrinsically Safe applications 32
5.4 Battery replacement instructions 33
6. Maintenance 34
6.1. General directions 34
6.2. Repair 34
Appendix A: Technical specification 35
Appendix B: Troubleshooting 38
Index of this manual 39

1. INTRODUCTION

1.1. SYSTEM DESCRIPTION OF THE F132-P

Functions and features
The batch controller model F132-P is a microprocessor driven instrument designed for batching and filling of small batch sizes up to large quantities as well as displaying total and accumulated total.
This product has been designed with a focus on:

- ultra-low power consumption to allow long-life battery powered applications (type PB / PC),
- intrinsic safety for use in hazardous applications (type XI),
- several mounting possibilities with GRP or aluminum enclosures for industrial surroundings,
- ability to process all types of flowmeter signals,
- receipt printer interface to print completed batch receipts.

Flowmeter input
This manual describes the unit with a pulse type input from the flowmeter "-P version". Other versions are available to process (0)4-20mA or 0-10V flowmeter signals.
One flowmeter with a passive or active pulse, Namur or sine wave (coil) signal output can be connected to the F132-P. To power the sensor, several options are available.

Standard outputs
Two transistor or relay outputs: for two-stage control or one-stage control.

Receipt printer interface
A printer interface to allow printing of receipts that go along with completed batches.

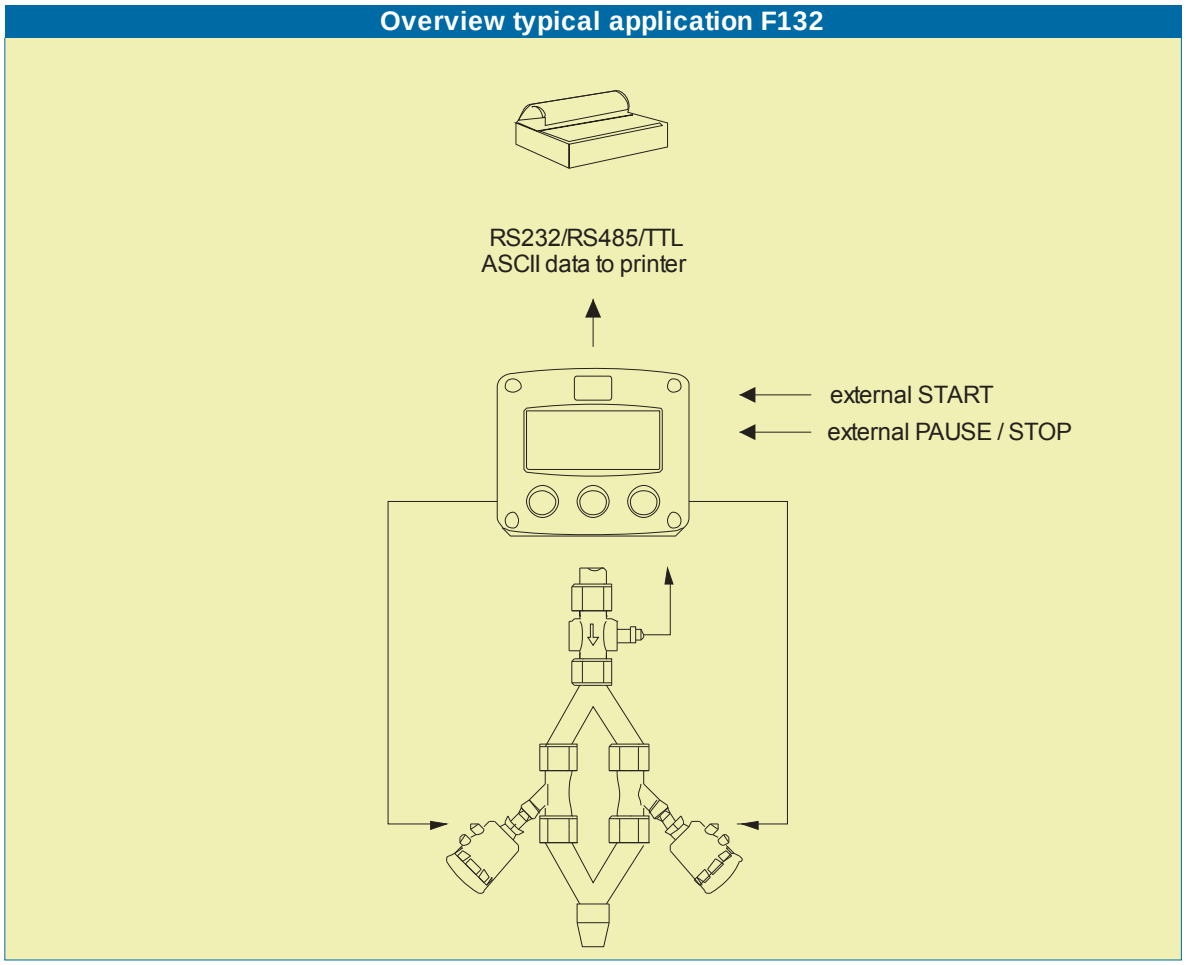

Fig. 1: Typical application of the F132-P

Configuration of the unit

The F132-P was designed to be implemented in many types of applications. For that reason, a SETUP-level is available to configure your F132-P according to your specific requirements.
SETUP includes several important features, such as K-factors, measurement units, signal selection etc. All setting are stored in EEPROM memory and will not be lost in the event of power failure or a drained battery.
To extend the battery-life time, please make use of the power-management functions as described in chapter 3.2.3.

Display information

The unit has a large transflective LCD with all kinds of symbols and digits to display measuring units, status information and key-word messages.
A backup of the total and accumulated total in EEPROM memory is made every minute.

Receipt information

After each completed batch a receipt is printed on an external device. Additional receipts can be printed on demand.

Below example shows a printed receipt. The arrows indicate the items that can be configured. For configuration details and options see chapter 3.

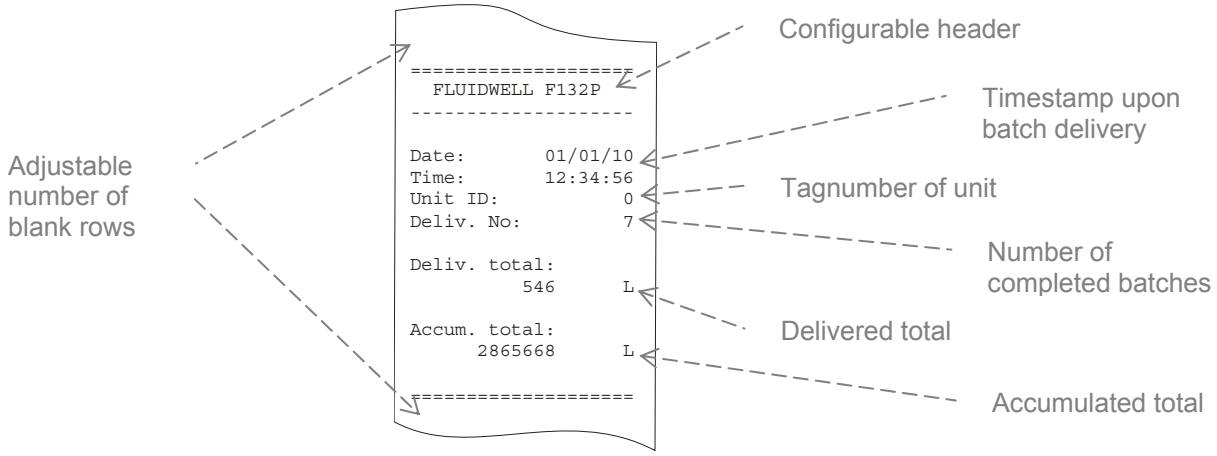

Fig. 2: Typical layout of a printed receipt

Options

The following options can be delivered: intrinsic safety, mechanical relay or active outputs, power- and sensor-supply options, LED backlight, panel-mount, wall-mount and weather-proof or flame proof enclosures.

Note !

Certain options may rule others out: For instance, it is not possible to combine an integrated AC power supply option with an intrinsic safety option. For more information contact your supplier.

2. OPERATIONAL

2.1. GENERAL

Caution !

- *The F132-P may only be operated by personnel who are authorized and trained by the operator of the facility. All instructions in this manual are to be observed.*
- *Take careful notice of the "Safety rules, instructions and precautionary measures" in the front of this manual.*

This chapter describes the daily use of the F132-P. This instruction is meant for users / operators.

2.2. CONTROL PANEL

The following keys are available:

Fig. 3: Control Panel.

Functions of the keys

This key is used to enter a batch quantity during operation of the F132-P.
It is also used to gain access to SETUP-level; please read chapter 3.

This key is used to **START** the batch process.
The arrow-key ▲ is used to increase a value after **PROG** has been pressed or to select a configuration mode; For configuration details please read chapter 3.

When in **RUN** press **STOP** once to pause the batch process. When pressed twice, the batch will be aborted and cannot be continued.
The arrow-key ► is used to display the total, accumulated total and batch counter as well as a menu option to print a batch receipt.
After **PROG** has been pressed, the arrow-key ► is used to select a value.

2.3. OPERATOR INFORMATION AND FUNCTIONS

In general, the F132-P will function at Operator level. The information displayed depends upon the SETUP-settings. All pulses generated by the connected flowmeter are measured by the F132-P in the background, whichever screen refresh rate setting is chosen. After pressing a key, the display will be updated quickly during a 30 second period, after which it will slow-down again.

Note !

If you start a procedure but do not finish it, or you don't touch a key for 20 seconds, the F132-P will automatically return to Operator level without making changes.

- **To enter a batch quantity**
  To change the PRESET-value, act as follows:

  1) When **READY** is displayed press **PROG** briefly: the **PROGRAM** indicator starts flashing
  2) use ► to select the digits and ▲ to increase that value,
  3) set the new PRESET-value by *briefly* pressing **ENTER**.
     (Pressing **ENTER** for 3 seconds or more will cancel your settings: the former value will then be reinstated.)

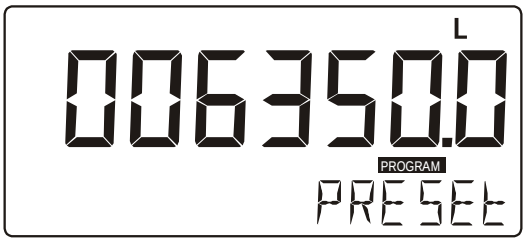

Fig. 4: Example display during programming preset value.

Note !

*Note that a PRESET-value will be used time after time until a new value is accepted. Please note that changes will only be accepted after **ENTER** has been pressed briefly!*

- **Batch maximum**
  When you program a new value which is too large to fit on the display (see chapter 3, decimals) the arrow-down symbol ▼ will be displayed while programming; the new value will *not* be accepted!

- **Starting up a batch process**
  A new batch process can only be started when **READY** is displayed. The batch process is started by pressing **START**. Depending on the SETUP-settings, one or two output valves will be energized, the batch starts and the **RUN** indicator lights up. An arrow on the display indicates if the ACTUAL-value is / was counting up or down.

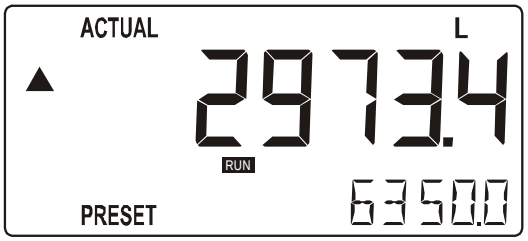

Fig. 5: Example display during batch processing.

- **Interrupting and ending the batch process**
  When **STOP** is pressed once, the batch process will be temporarily interrupted; the actual values are not lost. On the display, the **PAUSE** indicator will flash. From this stage, the batch process can be resumed with the **START** key.
  The process can be ended entirely at all times by pressing **STOP** twice, in which case the actual values are "lost" and the system returns to steady state: *the batch cannot be resumed.*

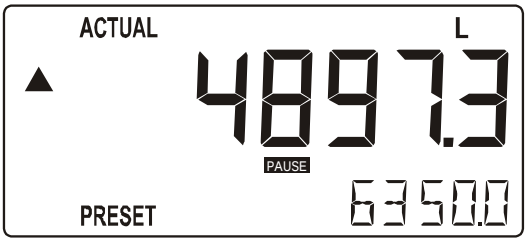

Fig. 6: Example display with batch paused.

When a batch has completed the display shows **READY** and one receipt will be printed automatically. The following functions are now available:

- **Display accumulated total**
  With **READY** displayed, press ► *once* to display TOTAL and ACC. TOTAL (accumulated total). The value will count up to 99,999,999,999. The unit and number of decimals are displayed according to the configuration settings for preset.

Note !

When the value is too large to display, the readout changes to -------. The maximum number to display can be changed with the decimals function, as described in chapter 3.

- **Clear total**

  The value for total can be cleared when the display shows **READY**.
  1) Press ► *once* to display total and accumulated total (see above).
  2) Press **PROG**. On the display PUSH STOP will flash.
  3) Press **STOP** *again* to clear the TOTAL counter.
     To cancel at this stage, press another key or wait 20 seconds.

  Clearing the TOTAL does not affect the accumulated total (ACC. TOTAL).
  The accumulated total cannot be cleared.

- **Display batch number**

  When **READY** is displayed, press ► *twice* to see the number of completed batches.
  The number of completed batches cannot be cleared.

- **Receipt printing**

  When a batch has completed the display shows **READY** and *one* receipt will be printed automatically. As long as **READY** is displayed you may print additional receipts.

  To print additional receipts of the last completed batch act as follows:
  1) when **READY** is displayed, press ► *three times*, until the display shows REPRINT Yes/No.
  2) Now press **START** (Yes) to print another receipt, press **STOP** (No) to cancel and return to the main operator display.

Caution !

You can only print receipts of the last completed batch. Once a new batch is started **READY** *goes off and* **RUN** *is displayed. During this time you cannot print receipts.*

2.4 OPERATOR ALARMS

- **Low-battery alarm**

  When the battery voltage drops, it must be replaced. At first the low-battery icon will flash, but as soon as it is displayed continuously, the battery MUST be replaced shortly after!
  Only official batteries may be used, or else warrantee will be terminated. The remaining lifetime after the first moment of indication is generally several days up to some weeks.

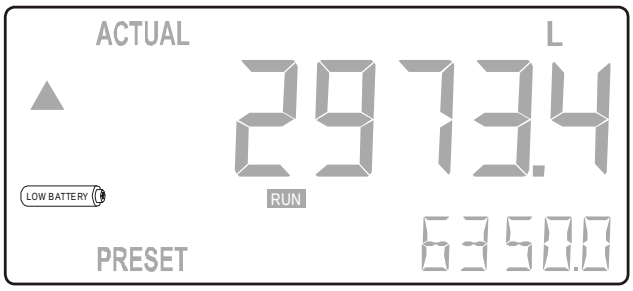

Fig. 7: Example display showing low-battery alarm.

- **No-flow alarm**

  The F132-P offers a no-flow monitoring feature: When the flowmeter fails to generate a signal during a certain (preset) time period, the unit will shut-off the control output(s) and bring the batch controller in alarm status.
  The indicators **PAUSE** and **ALARM** light up and NO FLOW is displayed. Press **STOP** to acknowledge and bring the batch in **PAUSE** mode. From there you can cancel or continue the batch. (See “Interrupting and ending the batch process” for details.)

- **Alarm 0001-0003**

  When **ALARM** is displayed, press the ▲ key to display the code of the alarm code.
  Please consult Appendix B: troubleshooting for an explanation of the alarm code.

- **Printer malfunction**

  For troubleshooting printer failures see Appendix B.

3. CONFIGURATION

3.1. INTRODUCTION

This and the following chapters are exclusively meant for electricians and non-operators. In these, an extensive description of all software settings and hardware connections are provided.

Caution !

- *Mounting, electrical installation, start-up and maintenance of the instrument may only be carried out by trained personnel authorized by the operator of the facility. Personnel must read and understand this Operating Manual before carrying out its instructions.*
- *The F132-P may only be operated by personnel who are authorized and trained by the operator of the facility. All instructions in this manual are to be observed.*
- *Ensure that the measuring system is correctly wired up according to the wiring diagrams. The housing may only be opened by trained personnel.*
- *Take careful notice of the " Safety rules, instructions and precautionary measures" in the front of this manual.*

3.2. PROGRAMMING SETUP-LEVEL

3.2.1. GENERAL

Configuration of the F132-P is done at SETUP level.

- SETUP-level is reached by pressing **PROG** for 7 seconds; during which time, both arrows ⬍ will be displayed.
- After 7 seconds **SETUP** is displayed and you have entered the SETUP level
- To return to the operator level, press **PROG** for three seconds or wait: if no keys are pressed for 2 minutes, the unit will exit **SETUP** automatically.

SETUP can be entered at all times while the F132-P remains fully operational.

Note !

Note: *A pass code may be required to enter* **SETUP**. *Without this pass code access to* **SETUP** *is denied.*

To enter SETUP-level:

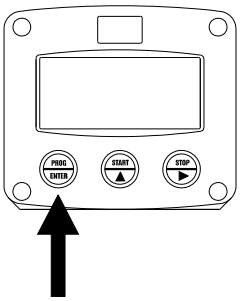

Press PROG/ENTER for 7 seconds

Matrix structure SETUP-level:

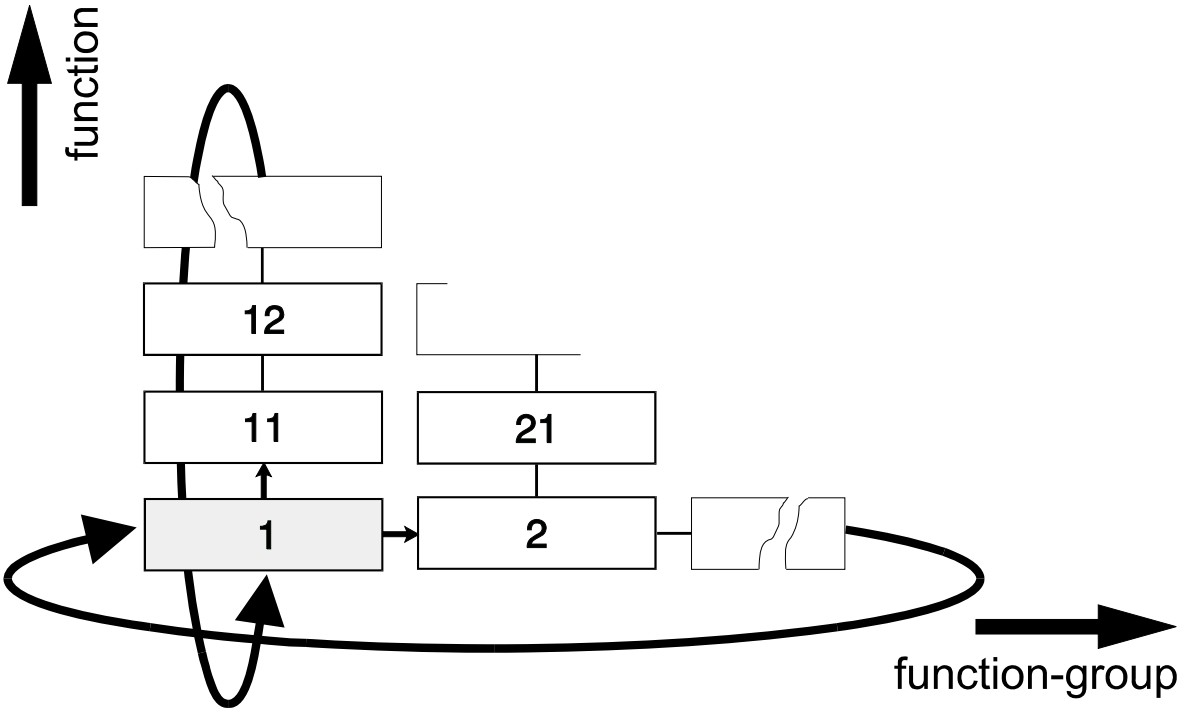

SCROLLING THROUGH SETUP-LEVEL

Selection of function-group and function:
SETUP is divided into several function groups and functions.

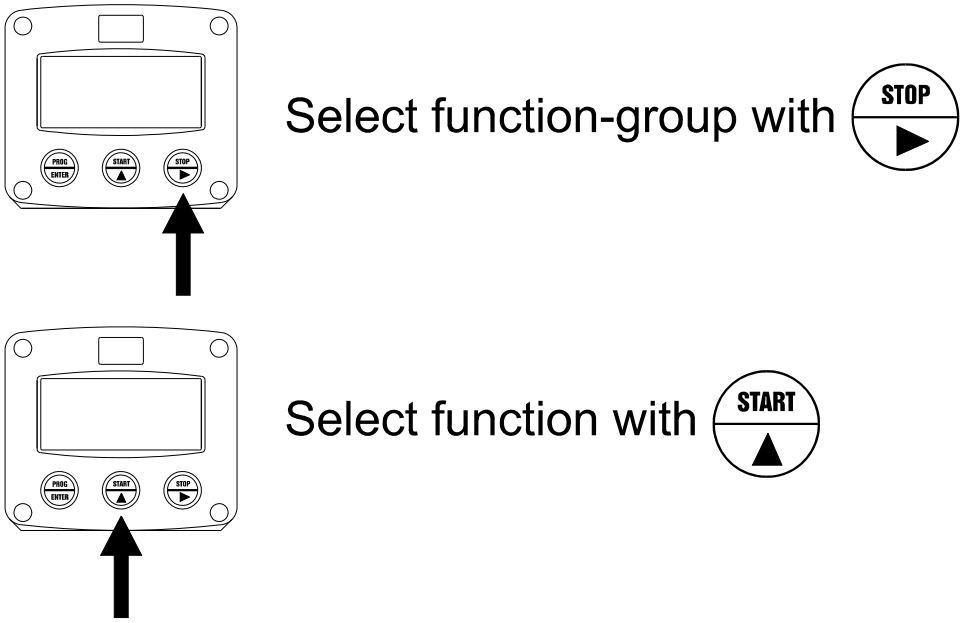

Each function has a unique number, which is displayed below **SETUP** at the bottom of the display. The number is a combination of two figures. The first figure indicates the function-group and the second figure the sub-function. Additionally, each function is expressed with a keyword.

After selecting a sub-function, the next main function is selected by scrolling through all "active" sub-functions (e.g. 1▲ , 11▲ , 12▲ , 13▲ , 14▲ , 1►, 2►, 3▲ , 31 etc.).

To change or select a value:

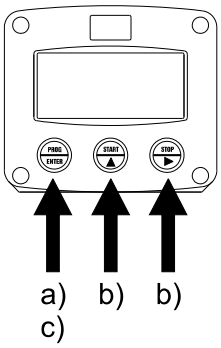

a) press PROG/ENTER briefly; **PROGRAM** will start flash

b) select or enter value with START ▲ and / or STOP ▶

c) press PROG/ENTER to confirm the value / selection.

- To change a value, use ► to select the digits and ▲ to increase that value.
- To select a setting, both ▲ and ► can be used.
- If the new value is invalid, the increase sign ▲ or decrease-sign ▼ will be displayed while you are programming.

When data is altered but **ENTER** is not pressed, then the alteration can still be cancelled by waiting for 20 seconds or by pressing **ENTER** for three seconds: the PROG-procedure will be left automatically and the former value reinstated.

Note !

Note: *alterations will only be set after* ***ENTER*** *has been pressed!*

To return to OPERATOR-level:

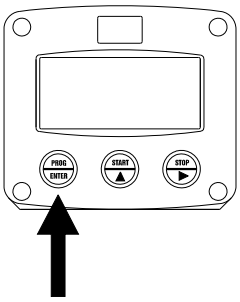

Press PROG/ENTER for 3 seconds

In order to return to the operator level, **PROG** will have to be pressed for three seconds. Also, when no keys are pressed for 2 minutes, SETUP will be left automatically.

3.2.2. OVERVIEW FUNCTIONS SETUP LEVEL

SETUP FUNCTIONS AND VARIABLES			
1	**PRESET**		
	11	UNIT	L - m3 - kg - lb - GAL - USGAL - bbl - no unit
	12	DECIMALS	0 - 1 - 2 - 3 (Ref: displayed value)
	13	K-FACTOR:	0.000010 - 9,999,999
	14	DECIMALS K-FACTOR	0 - 6
	15	BATCH MAXIMUM	X,XXX,XXX quantity
2	**OVERRUN**		
	21	OVERRUN	disable - enable
	22	TIME	0.1 - 999.9 seconds
3	**ALARM**		
	31	NO-FLOW ALARM	disable - enable
	32	NO-FLOW TIME	0.1 - 999.9 seconds
4	**DISPLAY**		
	41	DISPLAY	increase - decrease
5	**POWER MANAGEMENT**		
	51	LCD UPDATE	fast - 1 sec - 3 sec - 15 sec - 30 sec - off
	52	BATTERY MODE	operational - shelf
6	**FLOWMETER**		
	61	SIGNAL	npn - npn_lp - reed - reed_lp - pnp - pnp_lp - namur - coil_hi - coil_lo - act_8.1 - act_12 - act_24
7	**RELAYS**		
	71	RELAYS	1-step / 2-step
	72	PRECLOSE	X,XXX,XXX quantity
8	**COMMUNICATION**		
	81	SPEED / BAUDRATE	1200 - 2400 - 4800 - 9600
	82	HEADER	A header with 16 alphanumerical characters
	83	LINETERMINATION	CR/LF - CR - LF
	84	STARTROW	0 – 9
	85	ENDROW	0 – 9
	86	FORMFEED	enable - disable
	87	DATEFORMAT	Y.M.D - D.M.Y - M.D.Y
9	**OTHERS**		
	91	TYPE / MODEL	F132-P (fixed)
	92	SOFTWARE VERSION	02.05.xx (fixed)
	93	SERIAL NO.	XXXXXXXX (fixed)
	94	TIME	HH:MM:SS (24 hour format)
	95	DATE	20YY:MM:DD
	96	PASSWORD	0000 - 9999
	97	TAGNUMBER	0000000 - 9999999

3.2.3. EXPLANATION OF SETUP-FUNCTIONS

1 - PRESET	
MEASUREMENT UNIT 11	**SETUP** 11 determines the measurement unit for preset, total, accumulated total and pulse output. The following units can be selected: `L - m3 - kg - lb. - GAL - USGAL - bbl - _ (no unit).` Alteration of the measurement unit will have consequences for operator and setup level values. Please note that the K-factor has to be adapted as well; the calculation is not done automatically.
DECIMALS 12	The decimal point determines for preset, total, accumulated total and pulse output the number of digits following the decimal point. The following can be selected: `0000000 - 111111.1 - 22222.22 - 3333.333`
K-FACTOR 13	With the K-factor, the flowmeter pulse signals are converted to a quantity. The K-factor represents the number of pulses generated by the flowmeter per selected measurement unit (**SETUP** 11), for example per cubic meter. The more accurate the K-factor, the more accurate the functioning of the system will be. **Example 1:** **Calculating the K-factor.** *Let us assume that the flowmeter generates 2.4813 pulses per liter and the selected unit is "cubic meters / m3". A cubic meter consists of 1000 parts of one liter which implies 2,481.3 pulses per m3. So, the K-factor is 2,481.3. Enter "2481300" for* **SETUP** *- 13: Next enter "3" for* **SETUP** *- 14.* **Example 2:** **Calculating the K-factor.** *Let us assume that the flowmeter generates 6.5231 pulses per gallon and the selected measurement unit is gallons.* *So, the K-Factor is 6.5231. Enter "6523100"for* **SETUP** *- 13: Next enter "6" for* **SETUP** *- 14.*
DECIMALS K-FACTOR 14	This setting determines the number of decimals for the K-factor entered. (**SETUP** 13). The following can be selected: `0 - 1 - 2 - 3 - 4 - 5 - 6` Please note that this setting influences the accuracy of the K-factor indirectly. (i.e. the position of the decimal point and thus the value given) This setting has NO influence on the displayed number of digits for total (**SETUP** 12)!
BATCH MAXIMUM 15	This function limits the operator to enter a new preset-value which is more as the entered batch maximum.

2 - OVERRUN	
Overrun can occur at the end of the batch process, e.g. as a result of slowness of a valve / pump. Consequently, the accuracy is less. With this function, the F132-P analyses the actual overrun characteristic after every batch. This information is used to correct the overrun automatically.	
OVERRUN **21**	For an accurate overrun correction, it is necessary that the flow meter meets certain technical demands, such as "high resolution" and shows no "false" overrun due to a slow update time. Do not enable this function if the flow meter does not meet these technical demands.
OVERRUN TIME **22**	The overrun characteristic of the system will be analyzed during a certain time after the batch. In this way, false signal generated through leakage are eliminated. Enter here the expected time needed by the system to stop a batch. It is advisable to provide extra time in order to avoid an incorrect overrun correction or false leakage alarms. *Note that the next batch can only be started after elapsing of this overrun time!* The minimum overrun time is 0.1 second, maximum 999.9 seconds.

3 - ALARM	
The F132-P offers a no-flow monitoring feature: if the flowmeter fails to generate a signal during a certain period of time, the unit will shut-off the control output(s) and bring the batch controller in alarm status. After clearing the alarm, the batch can be continued or denied.	
NO-FLOW ALARM **31**	With this function, the no-flow monitoring can be enabled / disabled.
NO-FLOW TIME **32**	In case of a failing signal, this function determines the period of time after which an alarm has to be triggered. The minimum monitoring time is 0.1 second, maximum 999.9 seconds.

4 - DISPLAY	
DISPLAY **41**	The 17mm large digits can be set to `increase` (display actual batched quantity) or to `decrease` (display remaining quantity to be batched).

5 - POWER MANAGEMENT	
When used with the internal battery option, the user can expect reliable measurement over a long period of time. The F132-P has several smart power management functions to extend the battery life time significantly. Two of these functions can be set:	
LCD NEW **51**	The refresh rate of the display influences the power consumption significantly. When the application does not require a fast display update, it is **strongly advised** to select a slow refresh rate. Please understand that NO information will be lost; every pulse will be counted and the output signals will be generated in the normal way. The following can be selected: `Fast - 1 sec - 3 sec - 15 sec - 30 sec - off.` **Example:** **Battery life-time** *with a coil pick-up, 1KHz. pulses, FAST update: about 2 years.* *with a coil pick-up, 1KHz. pulses, 1 sec update: about 5 years.* ***Note:** after a button has been pressed by the operator - the display refresh rate will always switch to FAST for 30 seconds.*
BATTERY-MODE **52**	The unit has two modes: `operational` or `shelf`. After `shelf` has been selected, the unit powers down and can be stored for several years; it will not count pulses, the display is switched off and all settings and totals are stored. In this mode, power consumption is extremely low. To wake up the unit again, press **SELECT** twice.

Note !

Note !

6 - FLOWMETER

SIGNAL **61**	The F132-P is able to handle several types of input signal. The type of flowmeter pickup / signal is selected with **SETUP** 61. ***Note:*** *The selections "active pulse" offer a detection level of 50% of the supply voltage.* Read also par. 4.4.3. Flowmeter input terminal 09-11.

TYPE OF SIGNAL	EXPLANATION	RESISTANCE	FREQ. / MV	REMARK
NPN	NPN input	100K pull-up	6 kHz.	(open collector)
NPN - LP	NPN input with low pass filter	100K pull-up	2.2 kHz.	(open collector) less sensitive
REED	Reed-switch input	1M pull-up	1.2 kHz.	
REED - LP	Reed-switch input with low pass filter	1M pull-up	120 Hz.	Less sensitive
PNP	PNP input	100K pull-down	6 kHz.	
PNP - LP	PNP input with low pass filter	100K pull-down	700 Hz.	Less sensitive
NAMUR	Namur input	820 Ohm pull-down	4 kHz.	External power required
COIL HI	High sensitive coil input	-	20mV p.t.p.	Sensitive for disturbance!
COIL LO	Low sensitive coil input	-	90mV p.t.p.	Normal sensitivity
ACT_8.1	Active pulse input 8.1 VDC	3K9	10KHz.	External power required
ACT_12	Active pulse input 12 VDC	4K	10KHz.	External power required
ACT_24	Active pulse input 24 VDC	3K	10KHz.	External power required

7 - RELAY OUTPUT

Two control outputs are available to control relays or valves. Relay 2 can be configured to control the second valve of the two stage valve.

1-STEP / 2-STEP **71**	• Select `2-step` to run batches with two outputs and a two-stage valve: R*elay 2 will be used to control the second valve of the two stage valve.* • Select `1-step` to run batches with one output (R1) and a single valve.
PRECLOSE QUANTITY **72**	When `2-step` is selected in **SETUP** 71 (above), the switch-off moment for relay 2 must be set. The switch moment is based on the remaining quantity before the end of batch. If preclose is set to zero, relay 2 will switch simultaneously with relay 1.

8 – PRINT SETTINGS

The functions described below relates to external printers that are not part of the standard delivery. Programming these functions has no result if the external printer has not been installed correctly. For details and more information see your printers' manual and "Receipt information" on page 6.

BAUDRATE **81**	To match the printer speed, the following baud rates can be selected: `1200 - 2400 - 4800 - 9600 baud` See your printer manual for preferred setting.

HEADER **82**	Each receipt starts with a 16 character upper case text header. To customize the header text do the following: • Press **PROG** briefly; **PROGRAM** starts blinking • Optionally press ▲ *and* ► simultaneously to blank the header and/or • Place the cursor over a character location by repeatedly pressing ►; The cursor is indicated by a blinking character. • Press ▲ to change the character on the cursor location; **PROGRAM** will be displayed steady • Press ▲ *and* ► simultaneously to blank the character on the cursor location or press a combination of ▲ and ► to select a new character. The following character set can be chosen from: _ * – 0 1 2 3 4 5 6 7 8 9 A B C D E F G H I J K L M N O P Q R S T U V W X Y Z • Press **ENTER** to confirm the selection; **PROGRAM** starts flashing • Use ►to place the cursor over the next character location and *repeat above steps until all characters are changed* • Press **ENTER** *again* to store the new header; **PROGRAM** goes off. ***Notes***: • *A blinking underscore _ represents a space, not an underscore!* • *Arrows in the display indicate more header text to the left or right.* • *Pressing ▲ and ► simultaneously clears the header or character*
LINETERMINATION **83**	Define here what the printer should do to terminate a printed line. The following options can be selected: CR/LF - CR - LF CR causes a carriage return, but no line feed. LF causes a line feed, but no carriage return. Choose CR/LF to get both (default).
STARTROW **84**	Enter a number of empty lines to advance before printing the receipt. 0 - 1 - 2 - 3 - 4 - 5 - 6 - 7 - 8 - 9
ENDROW **85**	Enter a number of empty lines to advance after printing the receipt. 0 - 1 - 2 - 3 - 4 - 5 - 6 - 7 - 8 - 9
FORMFEED **86**	Select `enable` if a form feed has to be given each time a receipt is printed. If a form feed is not required select `disable`.
DATEFORMAT **87**	Select the format in which the date is to be printed and displayed. Y.M.D – D.M.Y – M.D.Y

Note !

9 - OTHERS	
TYPE OF MODEL **91**	For support and maintenance: provide this information to your supplier. (cannot be changed)
VERSION SOFTWARE **92**	For support and maintenance: provide this information to your supplier. (cannot be changed)
SERIAL NUMBER **93**	For support and maintenance: provide this information to your supplier. (cannot be changed)
TIME **94**	Enter the correct time of the system clock. The format is `HH.MM.SS` in 24 hour notation. ***Note****: The clock is used to print a timestamp on the receipt when a batch is delivered.*
DATE **95**	Enter the correct date of the system clock. The format in which the date is to be entered has been defined in **SETUP** 87.
PASS CODE **96**	All SETUP-values can be pass code protected. This protection is disabled with value 0000 (zero). 4 digits can be programmed, for example 1234.
TAGNUMBER **97**	For identification of the unit and communication purposes, a unique tag number of maximum 7 digits can be entered.

Note !

4. INSTALLATION

4.1. GENERAL DIRECTIONS

Caution !

- Mounting, electrical installation, start-up and maintenance of this instrument may only be carried out by trained personnel authorized by the operator of the facility. Personnel must read and understand this Operating Manual before carrying out its instructions.
- The F132-P may only be operated by personnel who are authorized and trained by the operator of the facility. All instructions in this manual are to be observed.
- Ensure that the measuring system is correctly wired up according to the wiring diagrams. Protection against accidental contact is no longer assured when the housing cover is removed or the panel cabinet has been opened (danger from electrical shock). The housing may only be opened by trained personnel.
- Take careful notice of the " Safety rules, instructions and precautionary measures " at the front of this manual.

4.2. INSTALLATION / SURROUNDING CONDITIONS

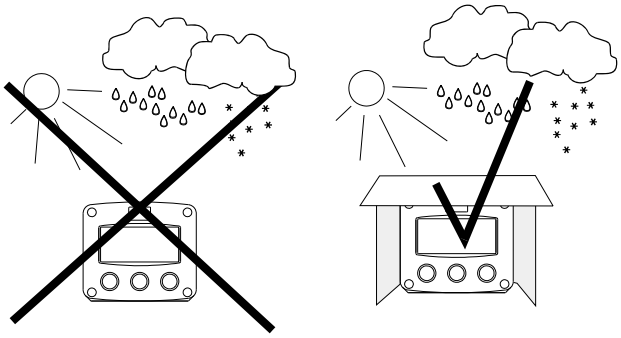

Take the relevant IP classification of the casing into account (see manufactures plate). Even an IP67 (NEMA 4X) casing should NEVER be exposed to strongly varying (weather) conditions.
When panel-mounted, the unit is IP65 (NEMA 4X)!
When used in very cold surroundings or varying climatic conditions, take the necessary precautions against moisture by placing a dry sachet of silica gel, for example, inside the instrument case.

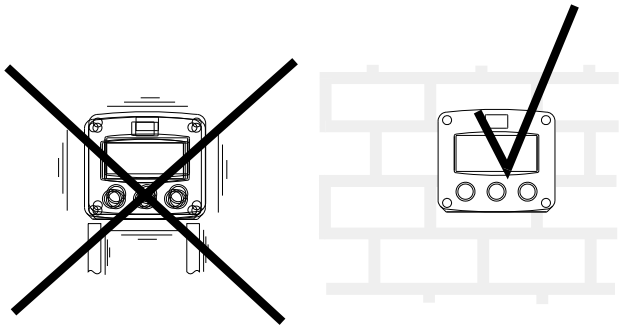

Mount the F132-P on a solid structure to avoid vibrations.

4.3. DIMENSIONS- ENCLOSURE

Aluminum enclosures:

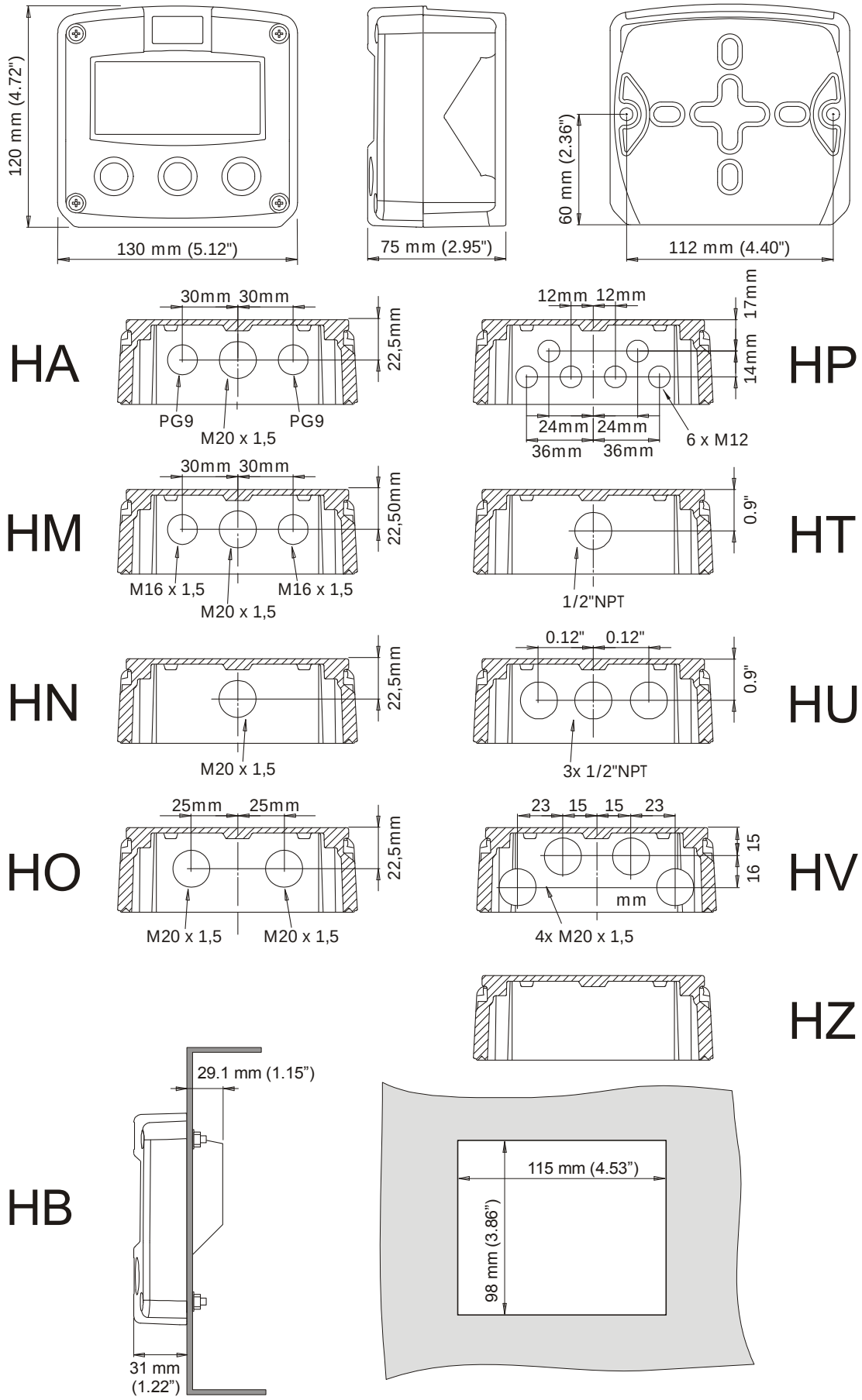

Fig. 8: Dimensions aluminum enclosures.

GRP enclosures:

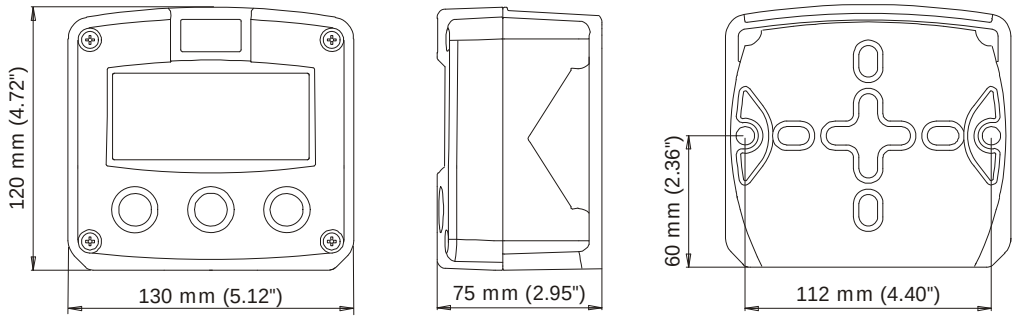

HK back box:
(flat bottom)

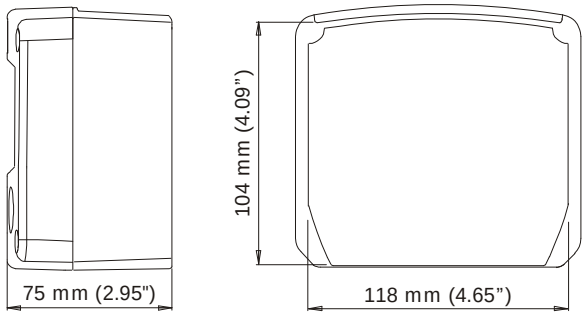

HD
HK

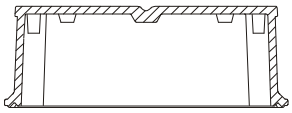

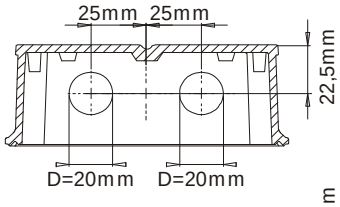

HG

HE

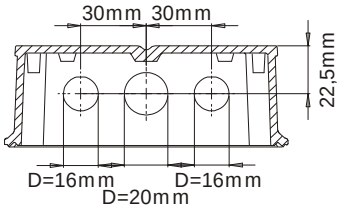

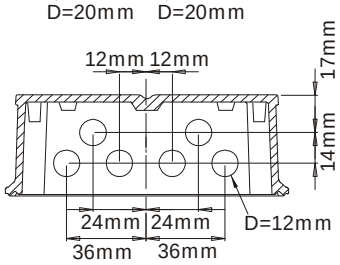

HH

HF

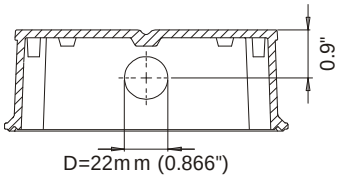

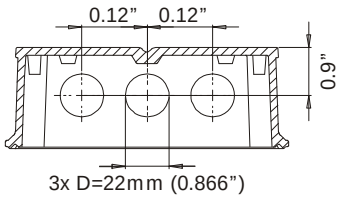

HJ

HC

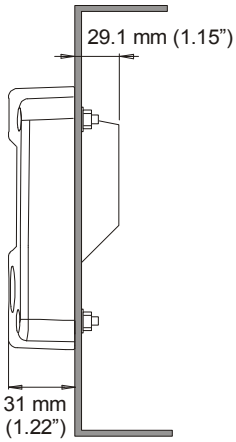

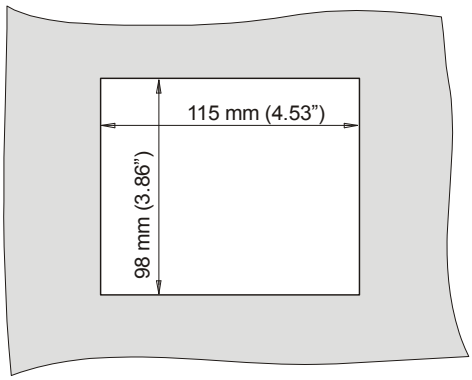

Fig. 9: Dimensions GRP enclosures.

4.4. INSTALLING THE HARDWARE

4.4.1. INTRODUCTION

- Electro static discharge does inflict irreparable damage to electronics! Before installing or opening the unit, the installer has to discharge himself by touching a well-grounded object.

- This unit must be installed in accordance with the EMC guidelines (Electro Magnetic Compatibility).

Aluminum enclosures

- When installed in an aluminum enclosure and a potentially explosive atmosphere requiring apparatus of equipment protection level Ga and Da, the unit must be installed such that, even in the event of rare incidents, an ignition source due to impact or friction sparks between the enclosure and iron/steel is excluded.

- Do ground the aluminum enclosure properly as indicated, if the F132-P has been supplied with the 115-230V AC power-supply type PM. The green / yellow wire between the back-casing and removable terminal-block may never be removed.

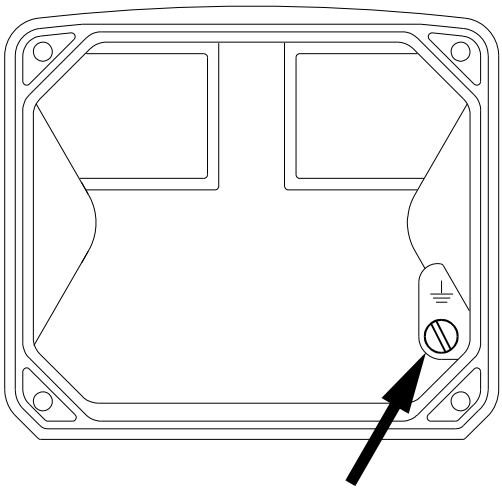

Fig. 10: Grounding aluminum enclosure with type PM 115-230V AC.

FOR INSTALLATION, PAY EMPHATIC ATTENTION TO:

- Separate cable glands with effective IP67 (NEMA4X) seals for all wires.
- Unused cable entries: ensure that you fit IP67 (NEMA4X) plugs to maintain rating.
- A reliable ground connection for both the sensor, and if applicable, for the metal casing.
- An effective screened cable for the input signal, and grounding of its screen to terminal 9 (GND) or at the sensor itself, whichever is appropriate to the application.

4.4.2. VOLTAGE SELECTION SENSOR SUPPLY

For Intrinsically Safe applications: read chapter 5.

Type PB / PC / PX (AP) - battery powered and output loop-powered applications:
Terminal 11 provides a limited supply voltage of 3.2 V DC (coil signals 1.2V) for the signal output of the flowmeter.

Note !

Note: *This voltage MAY NOT be used to power the flowmeters electronics, converters etc, as it will not provide adequate sustained power! All energy used by the flowmeters pick-up will directly influence the battery life-time. It is strongly advised to use a "zero power" pickup such as a coil or reed-switch when operating without external power. It is possible to use some low power NPN or PNP output signals, but the battery life time will be significantly reduced (consult your distributor).*

Type PD / PF / PM: Sensor supply: 1.2 - 3.2V - 8.2V - 12V or 24 V DC:
With this option, a real power supply for the sensor is available. The flowmeter can be powered with 8.2 - 12 or 24 V DC.
Total power consumption PD: max. 50mA@24V and PF / PM: max. 400mA@24V.
The voltage is selected with the three switches inside the enclosure.

WARNING

- *Warning: be sure that all the leads to the terminals are disconnected from the unit when the internal plastic protection cover has been removed !*
- *HIGH VOLTAGE 400V !! NEVER connect the mains power supply to the unit when the plastic protection cover has been removed !!!*

To access the voltage selection switches you must:
1. Remove the terminals to the field wiring
2. Remove the internal plastic cover.
   A circuit board with four mini switches is now visible.

Depending on the type of F132-P you will find the switches either on the left side (type PD) or on the right side (type PF / PM) of the circuit board. See figure 11 below for details.

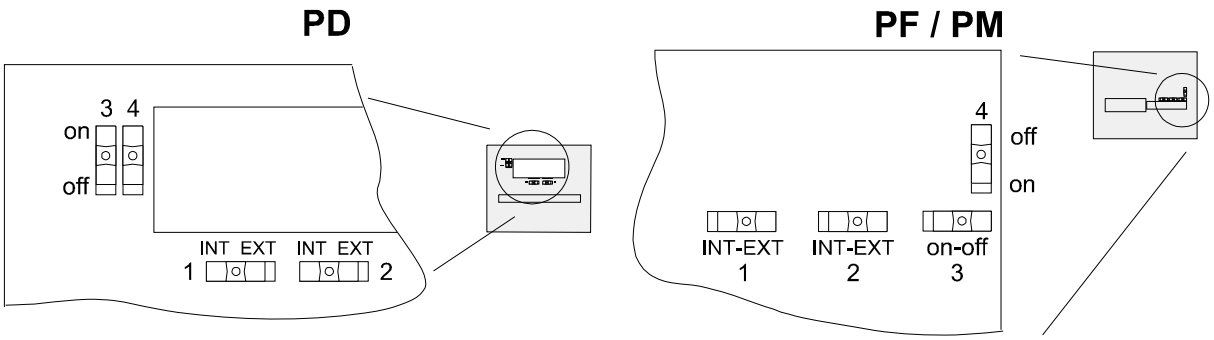

Fig. 11: Switch setting sensor supply voltage.

Switch positions

SENSOR A	
SWITCH 1	VOLTAGE
internal	3.2 V DC
external	switch 3+4

SENSOR B	
SWITCH 2	VOLTAGE

VOLTAGE SELECTION		
SWITCH 3	SWITCH 4	VOLTAGE
on	on	8.2 V DC
on	off	12 V DC
off	off	23 V DC

Function switch 1: voltage selection sensor A - terminal 11.
Function switch 2: not used in this model.
Function switch 3+4: the combination of these switches determine the voltage as indicated. Do move switch 1 and / or switch 2 to the OFF position to enable the selected voltage with switch 3+4.

4.4.3. TERMINAL CONNECTORS

For Intrinsically Safe applications: read chapter 5.

The following terminal connectors are available:

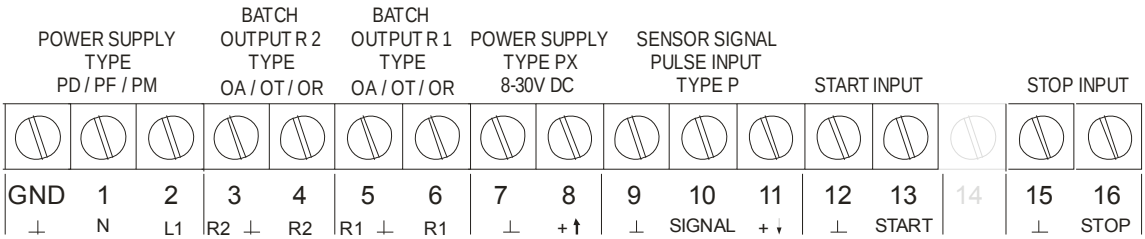

Fig. 12: Overview of terminal connectors standard configuration F132-P and options.

REMARKS: TERMINAL CONNECTORS:

Terminal GND- 01- 02: Power Supply - only available with type PD / PF or PM:

TYPE		SENSOR SUPPLY	Terminal			backlicht	TYPE AA	TYPE AU	Type OA	Type OR
			GND	01	02					
PD	8-24V AC	8,2 / 12 / 24V max. 50mA		AC	AC	◊	◊	◊	◊	
PD	8-30V DC	8,2 / 12 / 24V max. 50mA	L-	L+		◊	◊	◊	◊	
PF	24V AC ± 15%	8,2 / 12 / 24V max. 400mA		AC	AC	◊	◊	◊		◊
PF	24V DC ± 15%	8,2 / 12 / 24V max. 400mA	L-	L+		◊	◊	◊		◊
PM	115-230V AC ± 15%	8,2 / 12 / 24V max. 400mA	EARTH	AC	AC	◊	◊	◊	◊	◊
	Note PD	Do not use an AC autotransformer (Spartrafo) without a galvanic isolation.								
	Note PF / PM	The total consumption of the sensors and outputs may not exceed 400mA@24V								

◊=option

Note !

***Note:** For power supply type PX: please read Terminal 07-08 !*

Terminal 03-04; control output R2:
This output is available to control the batch process in two-step control mode.

Terminal 05-06; control output R1:
This output is available to control the batch process. Relay 1 is switched-on during the whole batch process.

Type OA: :
An active 24V DC signal according to the functions R1 and R2 is available with this option.
Max. driving capacity 50mA@24V per output. (Requires power supply type PD / PF / PM).

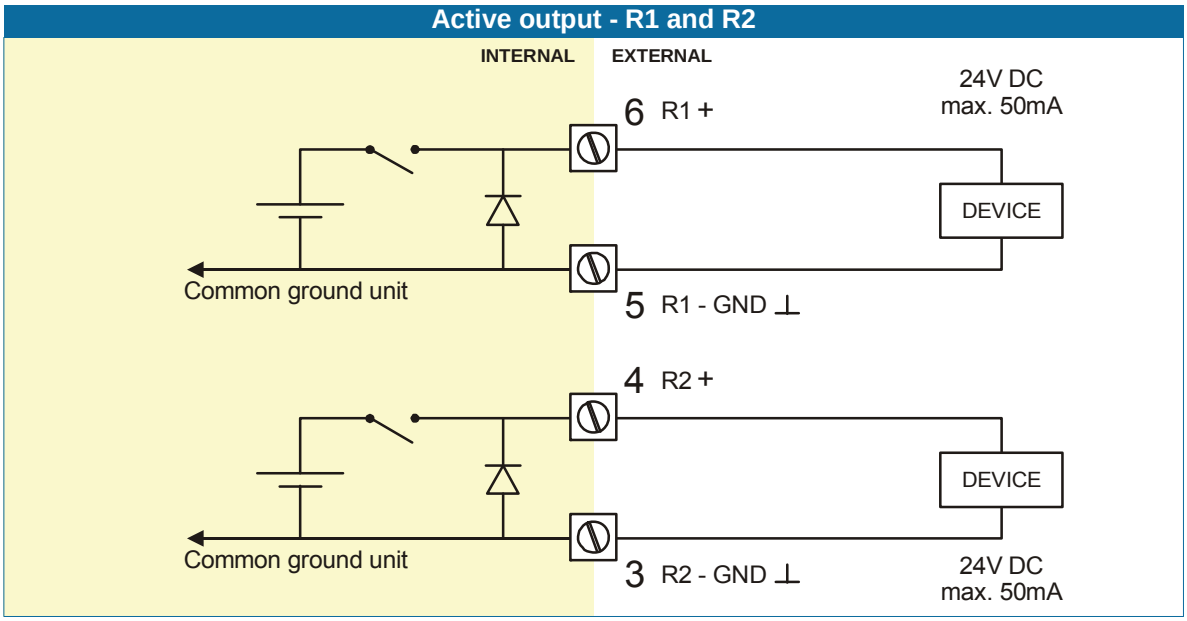

Type OR: :
A mechanical relay output according the functions R1 and R2 is available with this option.
Max. switch power 240V-0,5A per output. (Requires power supply type PF / PM).

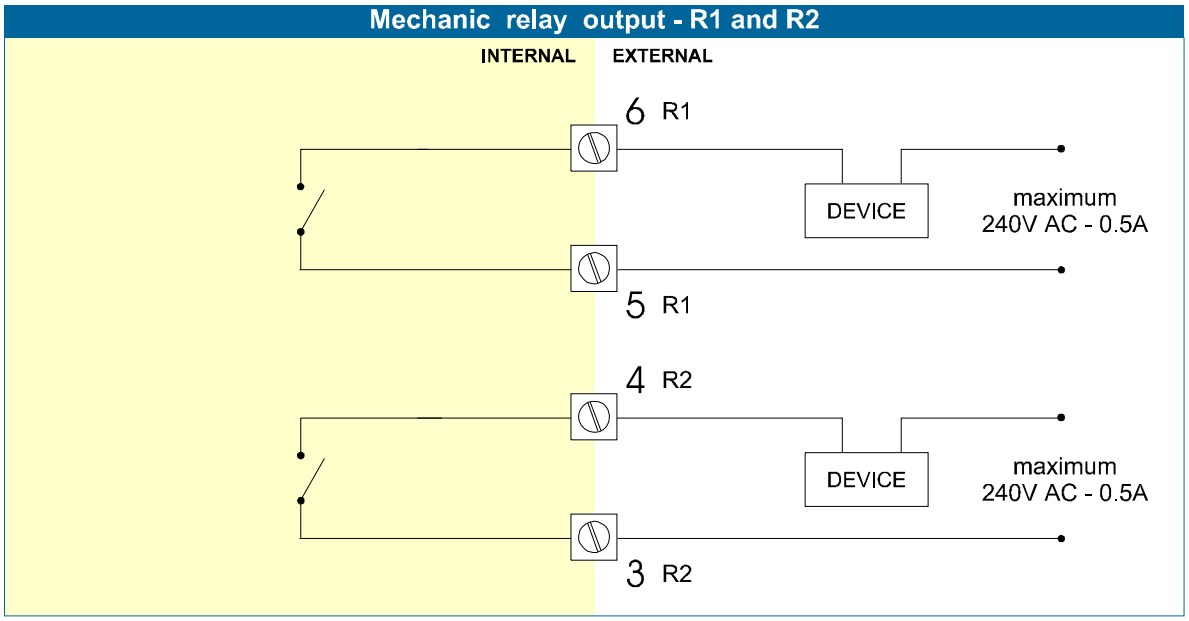

Type OT:
A passive transistor output is available with this option. Max. driving capacity 300mA@50V DC.

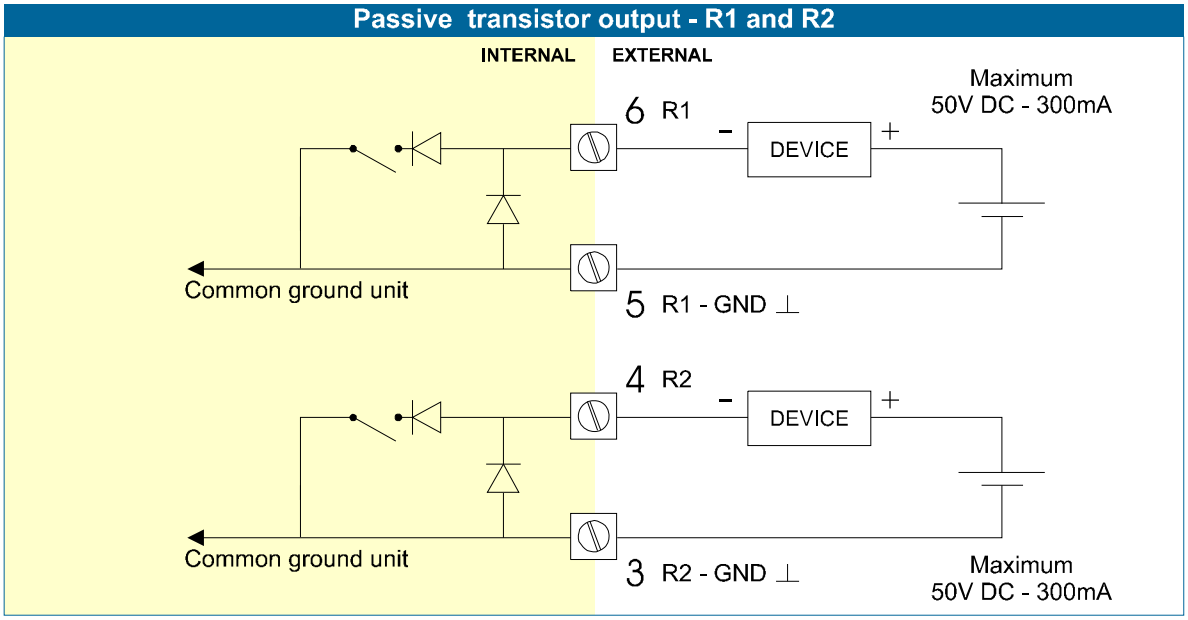

Terminal 07-08; basic POWER SUPPLY - type PX.
Connect an external power supply of 8-30VDC to these terminals; the "**-**" to terminal 7 and the "**+**" to terminal 8. When power is applied to these terminals, the (optional) internal battery will be disabled / enabled automatically to extend the battery life time.

Terminal 09-11; Flowmeter input:
Three basic types of flowmeter signals can be connected to the unit: pulse, active pulse or sine-wave (coil). The screen of the signal wire must be connected to the common ground terminal 09 (unless earthed at the sensor itself).
The maximum input frequency is approximately 10 kHz (depending on the type of signal). The input signal type has to be selected with the correct SETUP-function (see par. 3.2.3.)

Sine-wave signal (Coil):
The F132-P can be connected to flowmeters that have a coil output signal. With SETUP 61 two sensitivity levels can be selected (see par. 3.2.3.):

COIL LO: sensitivity from about 120mVp-p.
COIL HI: sensitivity from about 20mVp-p

Note !

Note: *Type ZF offers an increased COIL HI sensitivity of 10mVp-p.*

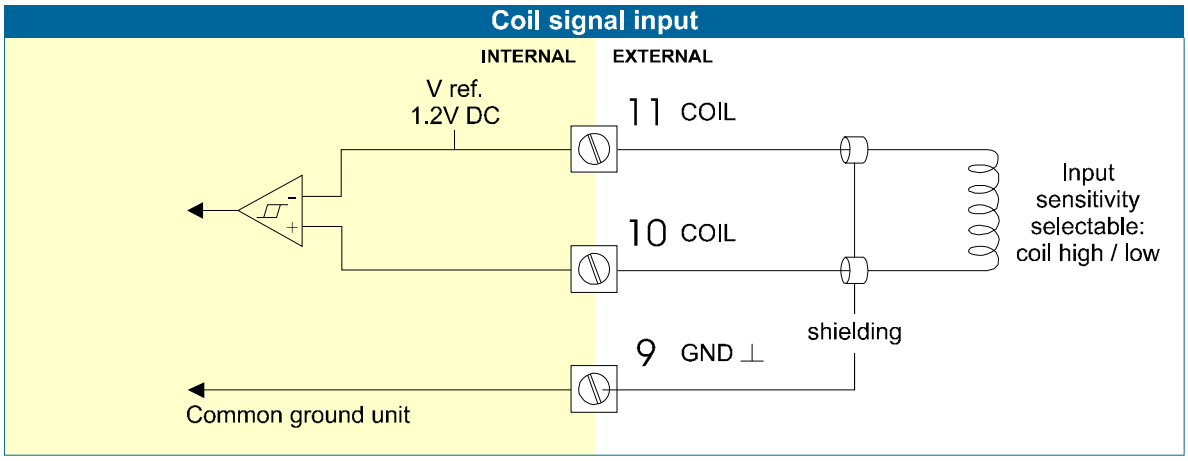

Pulse-signal NPN / NPN-LP:
The F132-P can be connected to flowmeters that have an NPN output signal. For reliable pulse detection, the pulse amplitude has to go below 1.2V. Signal setting NPN-LP employs a low-pass signal noise filter, which limits the maximum input frequency - read par. 3.2.3.

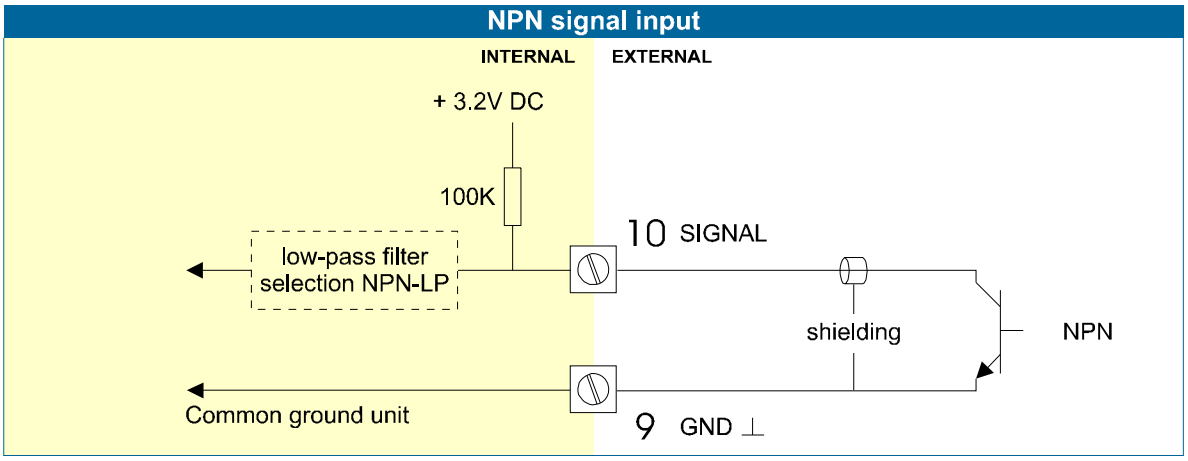

Pulse-signal PNP / PNP-LP:
The F132-P can be connected to flowmeters that have an PNP output signal. 3.2V is offered on terminal 11 which has to be switched by the sensor to terminal 10 (SIGNAL). For a reliable pulse detection, the pulse amplitude has to go above 1.2V. Signal setting PNP-LP employs a low-pass signal noise filter, which limits the maximum input frequency - read par. 3.2.3.
A sensor supply voltage of 8.1, 12 or 24V DC can be provided with power supply type PD, PF, PM.
For a signal detection level of 50% of the supply voltage: please refer to "active signals".

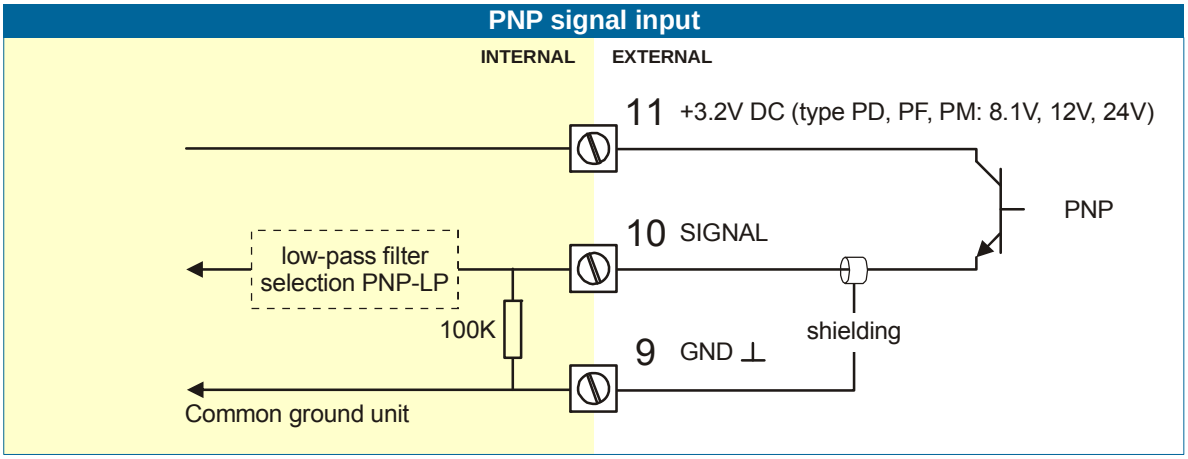

Active signals 8.1V - 12V and 24V:
If a sensor gives an active signal, please read par. 3.2.3. The detection levels are 50% of the selected supply voltage; approximately 4V (ACT_8.1) or 6V (ACT_12) or 12V (ACT_24).
Active signal selection may be desired when the F132-P is equipped with power supply type PD, PF, PM.

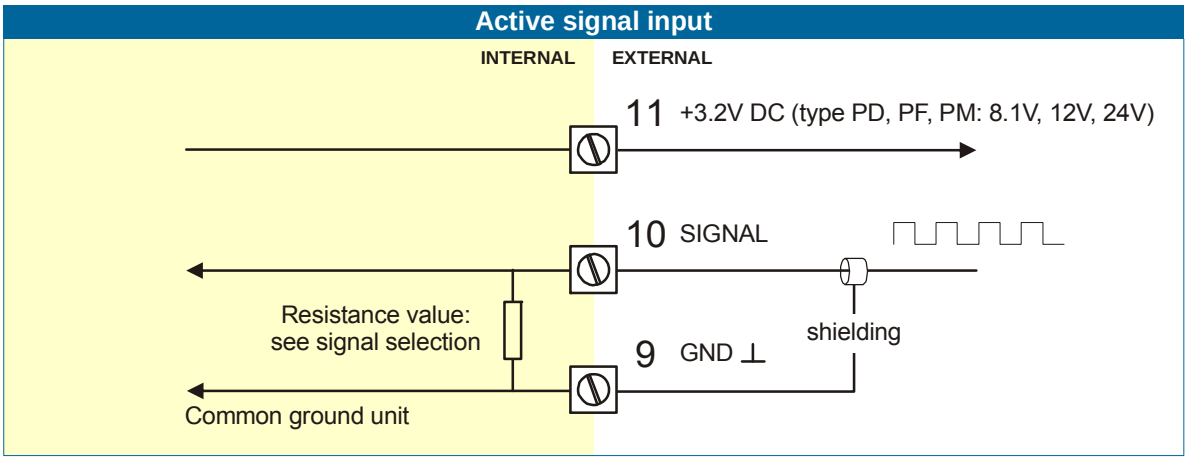

Reed-switch:
The F132-P can be connected to flowmeters that have a reed-switch. To avoid pulse bounce from the reed-switch, it is advised to select REED LP - low-pass filter (see par. 3.2.3.)

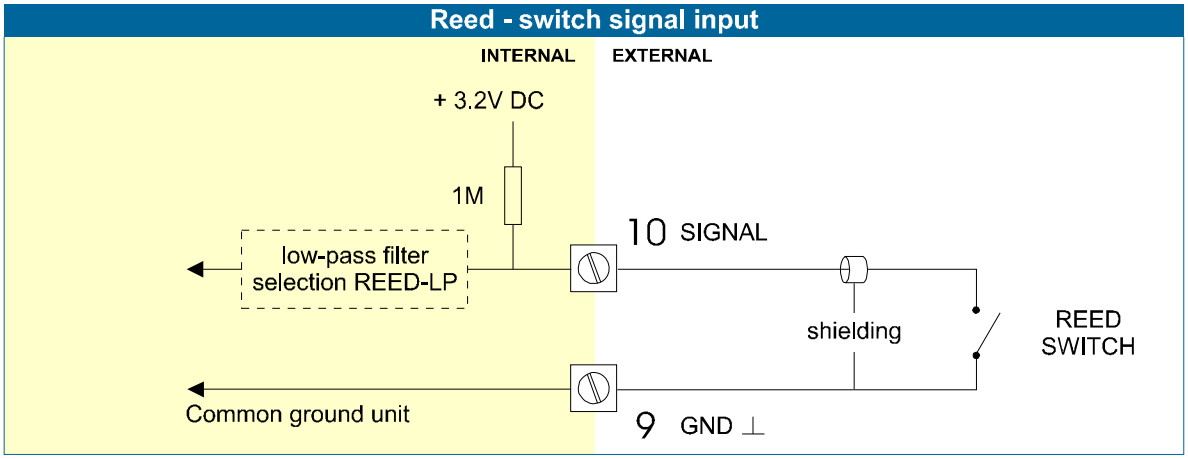

NAMUR-signal:
The F132-P can be connected to flowmeters with a Namur signal. A battery powered F132-P is unable to power the Namur sensor. However, a 8.2V sensor supply voltage (terminal 11) can be provided with power supply type PD, PF, PM.

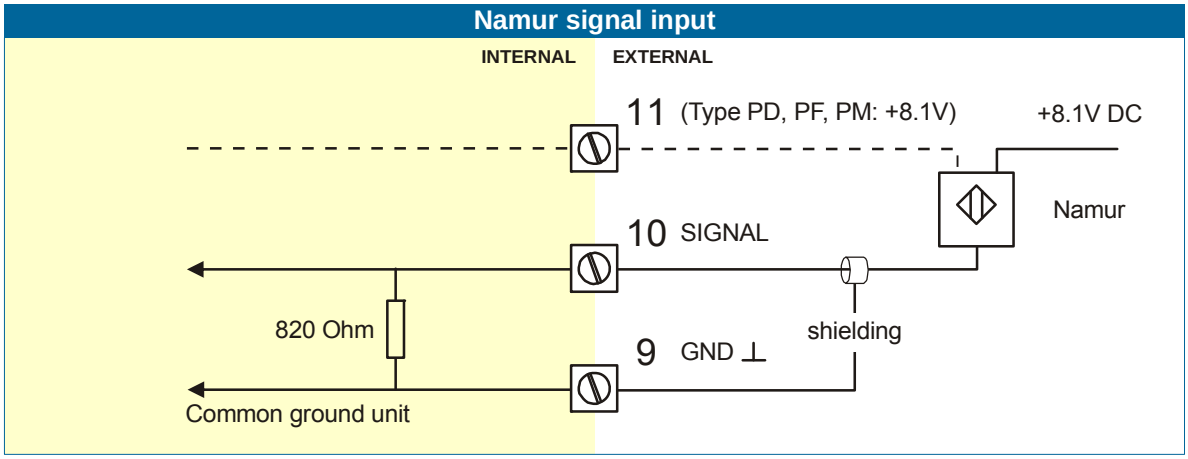

Terminal 12-13; external START:
With this function, the batch controller can be started with an external switch. The input must be switched with a potential free contact to the GND-terminal number 12 for at least 0.3 seconds.

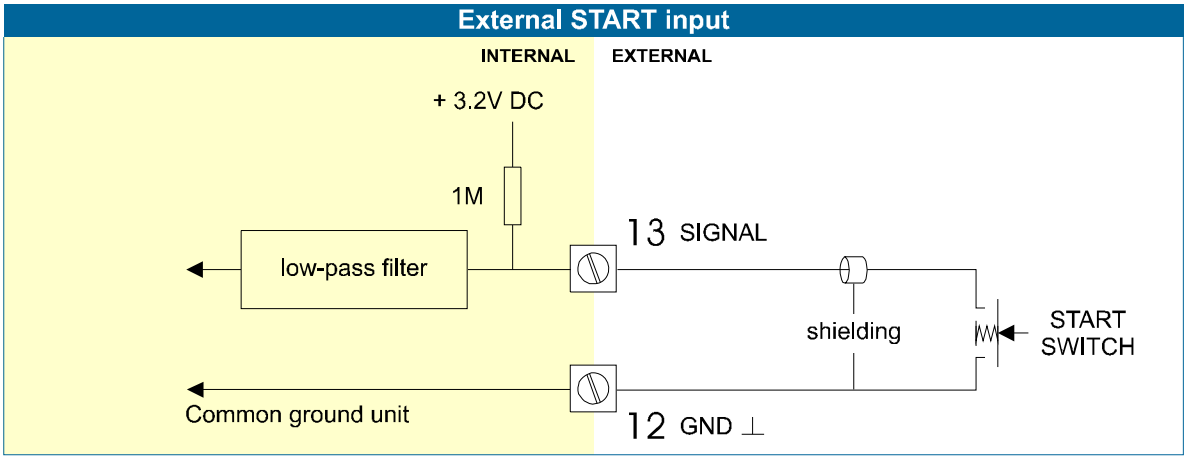

Terminal 15-16; external STOP:
With this function, the batch controller can be interrupted or cancelled with an external switch.
The input must be switched once for interruption or switch twice for cancellation with a potential free contact to the GND-terminal number 15 for at least 0.3 seconds.

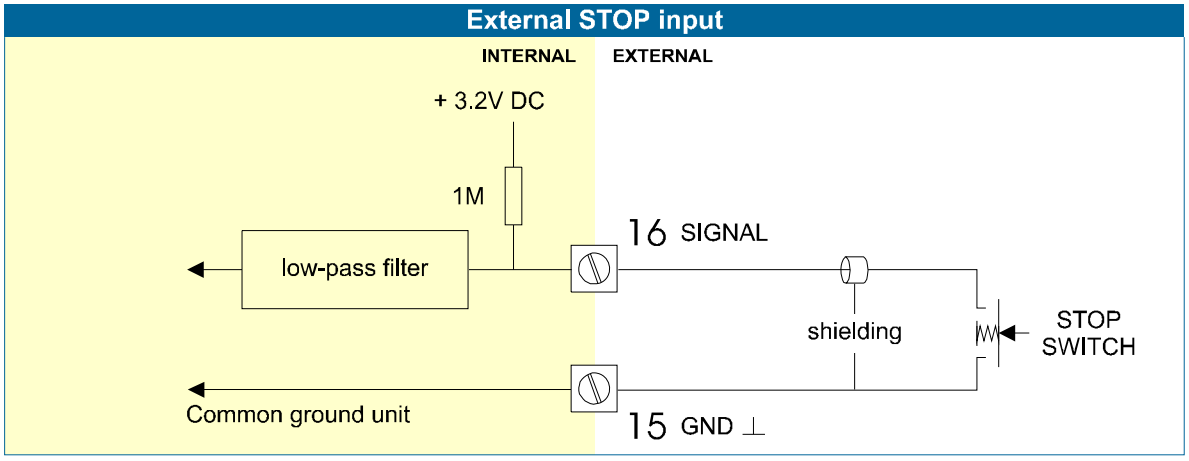

Terminal 26-31: type CB / CH / CI / CT – printer interface RS232 / RS485 / TTL

- Provides a serial printer interface based on RS232 (length of cable max. 15 meters) or RS485 (length of cable max. 1200 meters).

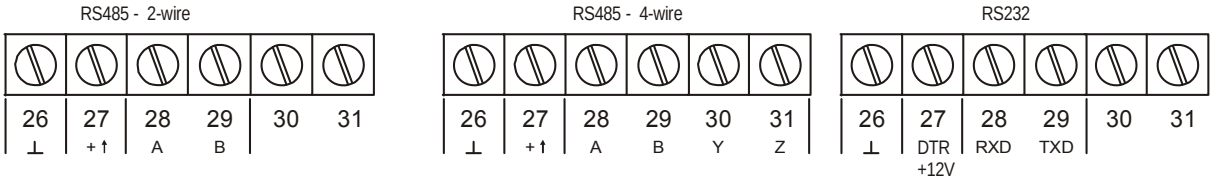

Fig. 13: Overview terminal connectors printer interface.

When using the RS232 communication option, terminal 27 is used for supplying the interface.
Please connect the DTR (or the RTS) signal of the interface to this terminal and set it active (+12V).
If no active signal is available it is possible to connect a separate supply between terminals 26 and 27 with a voltage between 8V and 24V.

5. INTRINSICALLY SAFE APPLICATIONS

5.1. GENERAL INFORMATION AND INSTRUCTIONS

Caution !

Cautions

- Mounting, electrical installation, start-up and maintenance of this device may only be carried out by trained personnel authorized by the operator of the facility. Personnel must read and understand this Operating Manual before carrying out its instructions.
- This device may only be operated by personnel who are authorized and trained by the operator of the facility. All instructions in this manual are to be observed.
- Ensure that the measuring system is correctly wired up according to the wiring diagrams. Protection against accidental contact is no longer assured when the housing cover is removed or the cabinet has been opened (danger of electric shock). The housing may only be opened by trained personnel.
- To maintain the degree of protection of at least IP65 in accordance with IEC 60529, certified cable entries in accordance with IEC 61241-0 must be used and correctly installed. Unused openings must be closed with suitable blanking elements.
- When the enclosure of the Indicator is made of aluminum alloy, when used in a potentially explosive atmosphere requiring apparatus of equipment protection level Ga and Da, the unit must be installed such that, even in the event of rare incidents, an ignition source due to impact or friction sparks between the enclosure and iron/steel is excluded.
- Take careful notice of the " Safety rules, instructions and precautionary measures " in the front of this manual.

WARNING

Safety Instructions

- When two or more active intrinsically safe circuits are connected to the indicator, in order to prevent voltage and/or current addition, applicable to the external circuits, precautions must be taken to separate the intrinsically safe circuits in accordance with IEC 60079-11.
- For the combined connection of the different supply, input and output circuits, the instructions in this manual must be observed.
- From the safety point of view the circuits shall be considered to be connected to earth.
- For installation under ATEX directive: this intrinsically safe device must be installed in accordance with the Atex directive 94/9/EC and the product certificate KEMA 03ATEX1074 X.
- For installation under IECEx scheme: this intrinsically safe device must be installed in accordance the product certificate IECEx DEK 11.0042X.
- Exchange of Intrinsically Safe battery FWLiBAT-0xx with certificate number KEMA 03ATEX1071 U or IECEx KEM 08.0005U is allowed in Hazardous Area. See paragraph 5.4. for detailed battery replacement instructions.

Note !

Please Note

- Certificates, safety values and declaration of compliance can be found in the document named: “Fluidwell F1..-..-XI - Documentation for Intrinsic Safety”.
- Special conditions for safe use mentioned in both the certificate and the installation instructions must be observed for the connection of power to both input and / or output circuits.
- When installing this device in hazardous areas, the wiring and installation must comply with the appropriate installation standards for your industry.
- Study the following pages with wiring diagrams per classification.

Label information (inside and outside the enclosure)
Indicated labels on the back cover (below) and on the inside cover (right) show the type labels for intrinsically safe certified units.
For details on usage see the separate “Fluidwell F1..-..-IX Documentation for Intrinsic Safety”.

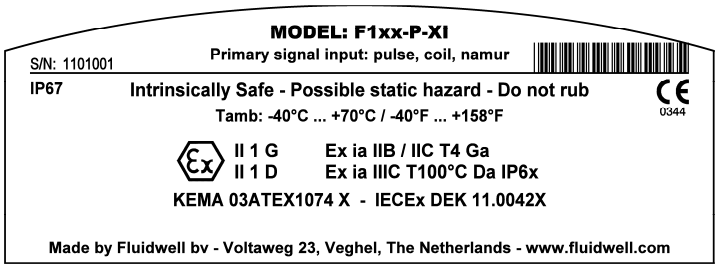

Serial number and year of production
This information can be looked-up on the display:
See setup function (par. 3.2.2.) for details.

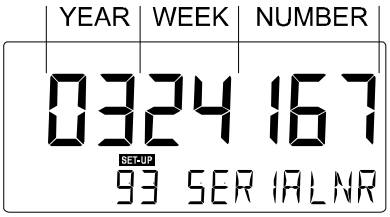

5.2. TERMINAL CONNECTORS INTRINSICALLY SAFE APPLICATIONS

Note !

The unit is classified as group IIB/IIIC by default.

Classification of the unit as group IIC is only possible under the following conditions:

- The indicator is either supplied by
  - the internal supply (option -PC); or
  - the external supply connected to terminals 0 and 1 (option -PD); or
  - the circuit supply connected to terminals 7 and 8 (option -AP);

  The maximum values for any of those circuits are those as defined for group IIB/IIIC;
- No other active external intrinsically safe circuits may be connected to the indicator, with exception of circuits connected to terminals 3 and 4 and/or terminals 5 and 6; the maximum values for any of those circuits are those as defined for group IIB/IIIC

Terminal connectors F132-P-XI:

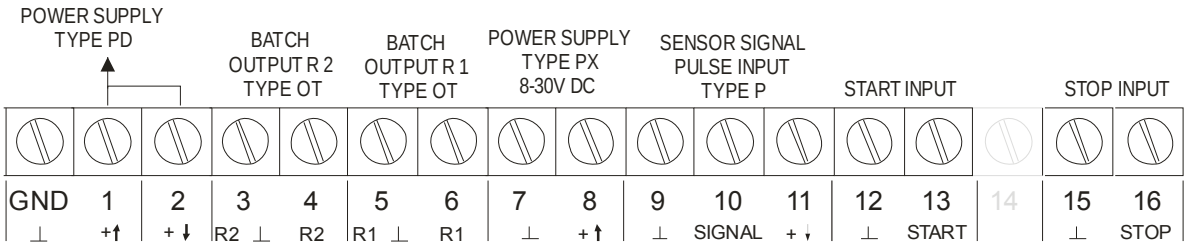

Fig. 14: Overview terminal connectors XI - Intrinsically Safe applications.

Explanation Intrinsically Safe options:

Type PD - Intrinsically Safe power supply and sensor supply - Terminal GND- 01 and 11.

TYPE		SENSOR SUPPLY	Terminal		
			GND	01	02
PD	Input voltage: 16-30V DC	3,2 - 8,1V	L-	L+	output voltage is according the input voltage; internally linked with terminal 01.

Terminal 02: this terminal offers the same voltage as connected to terminal 01.
Terminal 11: this terminal offers a 3.2V or 8.1V to power the sensor. This voltage is selected with the switch(es) inside the enclosure.

To access the voltage selection switches you must:
1. Remove the terminals to the field wiring
2. Remove the internal plastic cover.
   A circuit board with four mini switches is now visible.

Switch position		Switch position	
terminal 11		**no function**	
SWITCH 1	VOLTAGE	SWITCH 2	
on	8.1 V DC	not available	
off	3.2 V DC		

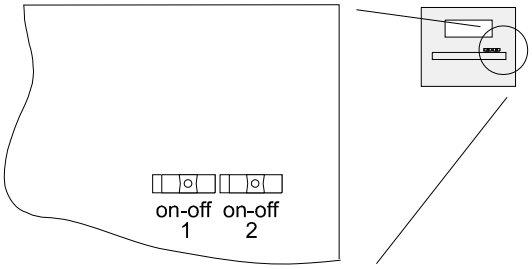

Fig. 15: Switch position voltage selection type PD-XI.

5.3. CONFIGURATION EXAMPLES INTRINSICALLY SAFE APPLICATIONS

Configuration example IIB/IIIC - F132-P-CT-OT-PX-XI

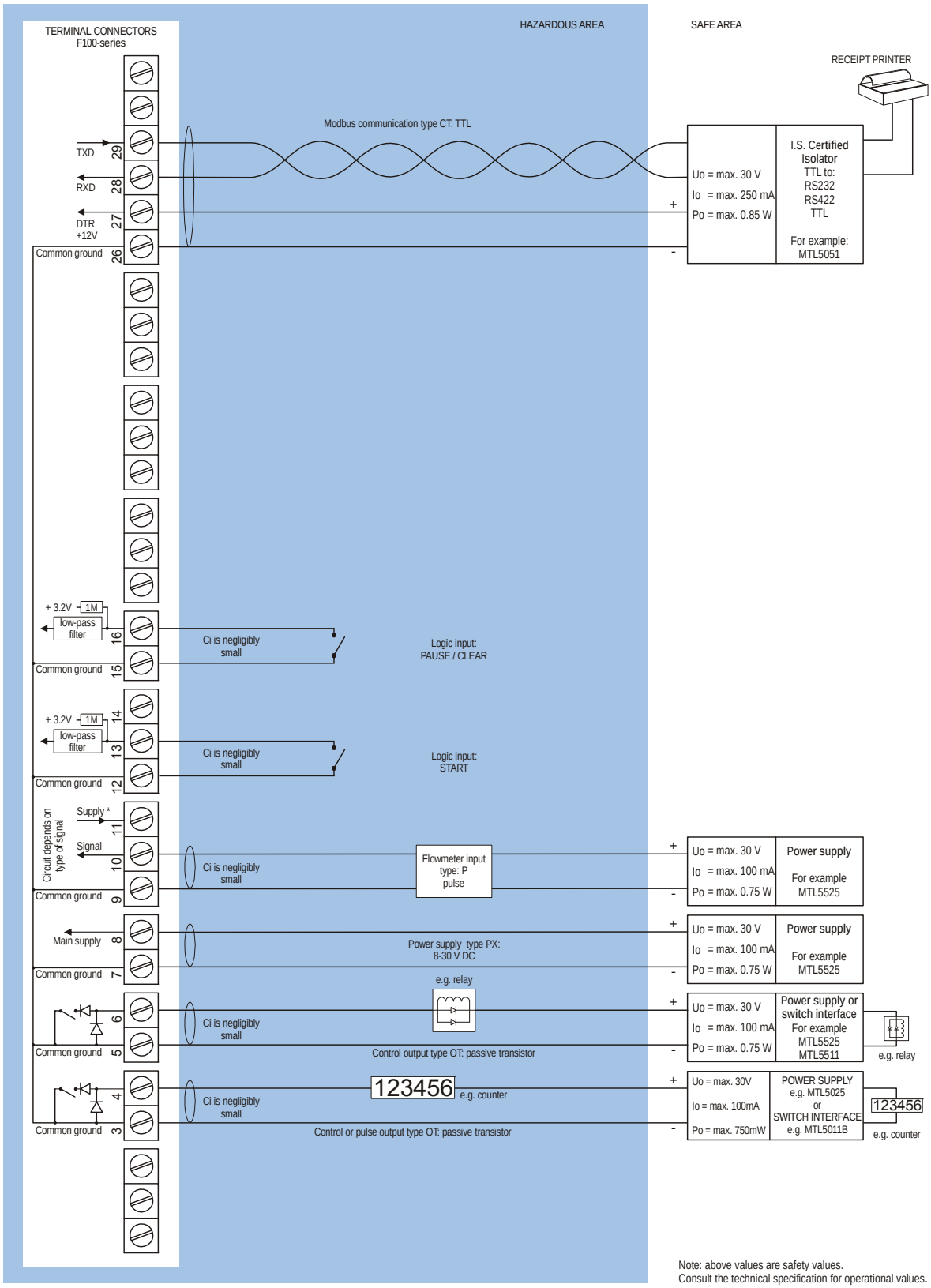

Fig. 16: Configuration example 1 Intrinsically Safe.

5.4 BATTERY REPLACEMENT INSTRUCTIONS

WARNING

Safety Instructions

- **Fire, explosion or severe burns may result if mistreated.** Do not recharge, crush, disassemble, incinerate, heat above 100°C (212°F) or expose contents to water.
- Mounting, electrical installation, start-up and maintenance of this device may only be carried out by trained personnel authorized by the plant operator. Personnel must read and understand this instruction before carrying out the replacement procedure.
- Always follow the instructions listed in the supplied Battery Replacement Instruction Sheet.
- Batteries pose an environmental hazard. Return used batteries to a recycling point.

Caution !

Safety instructions for hazardous areas

- Verify the correct battery is supplied: **Only batteries with indicated Ex label are certified for replacement and use in hazardous areas**. Batteries for use in safe areas have no Ex label. **DO NOT EXCHANGE**: Using the wrong type of battery can pose a SERIOUS RISK.
- **For use in hazardous areas Fluidwell recommends FW-LiBAT batteries (manufactured by Fluidwell bv) only**.

Battery replacement procedure

Note !

Depending on the production batch, one of two visualized Intrinsically Safe certified battery types may have been installed in the unit. They are interchangeable.

FW-LiBAT-001 battery

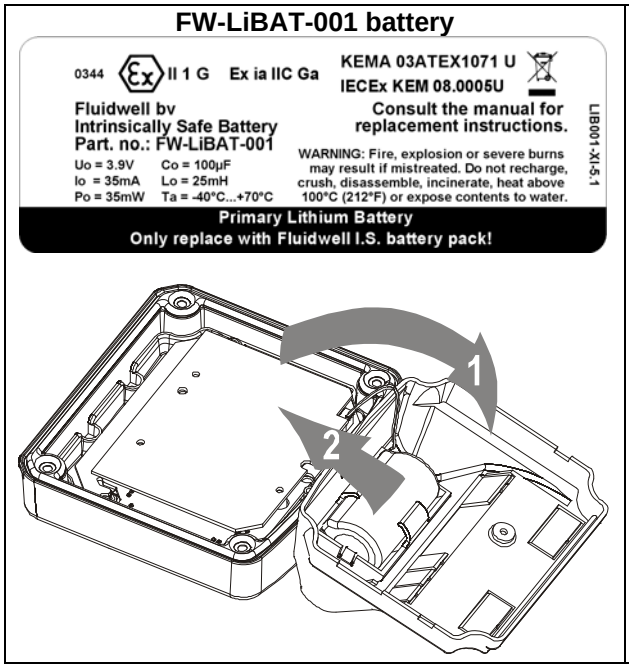

FW-LiBAT-021 battery

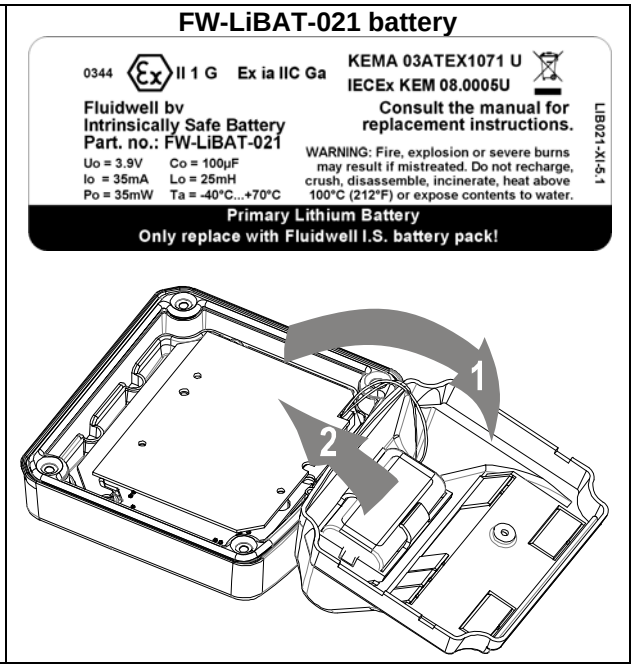

1. To replace the battery, open the unit to gain access to the back inside cover of the unit.
2. Unplug the field connectors from the back inside of the unit.
3. Remove the screw that holds the plastic inside cover.
4. Open the cover and unplug the battery connector.
5. Remove the battery from the inside of the plastic cover. *Do not remove the battery clip!*
6. Install the new battery and re-assemble the unit in reverse order.
7. Start-up the unit

6. MAINTENANCE

6.1. GENERAL DIRECTIONS

Caution !

- *Mounting, electrical installation, start-up and maintenance of the instrument may only be carried out by trained personnel authorized by the operator of the facility. Personnel must read and understand this Operating Manual before carrying out its instructions.*
- *The F132-P may only be operated by personnel who are authorized and trained by the operator of the facility. All instructions in this manual are to be observed.*
- *Ensure that the measuring system is correctly wired up according to the wiring diagrams. Protection against accidental contact is no longer assured when the housing cover is removed or the panel cabinet has been opened (danger from electrical shock). The housing may only be opened by trained personnel.*
- *Take careful notice of the " Safety rules, instructions and precautionary measures " in the front of this manual.*

The F132-P does not require special maintenance unless it is used in low-temperature applications or surroundings with high humidity (above 90% annual mean). It is the users responsibility to take all precautions to dehumidify the internal atmosphere of the F132-P in such a way that no condensation will occur, for example by placing dry silica-gel sachet in the casing just before closing it. Furthermore, it is required to replace or dry the silica gel periodically as advised by the silica gel supplier.

Battery life-time:
It is influenced by several issues :
- Type of sensor: read chapter 3.2.3. NPN and PNP inputs consume more energy than coil inputs.
- Input frequency: the higher the frequency, the shorter the battery life-time.
- Display update: fast display update uses significantly more power; **SETUP** 51.
- Low temperatures; the available power will be less due to battery chemistry.

Note !

Note: *It is strongly advised to disable unused functions.*

Check periodically:
- The condition of the casing, cable glands and front panel.
- The input/output wiring for reliability and aging symptoms.
- The process accuracy. As a result of wear and tear, re-calibration of the flowmeter might be necessary. Do not forget to re-enter any subsequent K-factor alterations.
- The indication for low-battery.
- Clean the casing with soapy-water. Do not use any aggressive solvents as these might damage the coating.

6.2. REPAIR

This product cannot be repaired by the user and must be replaced with an equivalent certified product. Repairs should only be carried out by the manufacturer or his authorized agent.

APPENDIX A: TECHNICAL SPECIFICATION

GENERAL

Display	
Type	High intensity reflective numeric and alphanumeric LCD, UV-resistant.
Digits	Seven 17mm (0.67") and eleven 8mm (0.31"). Various symbols and measuring units.
Refresh rate	User definable: 8 times/sec - 30 secs.
Type ZB	Transflective LCD with green LED backlight. Good readings in full sunlight and darkness. Note: only available for safe area applications. Power requirements: 12-24V DC + 10% or type PD, PF, PM. Power consumption max. 1 Watt.

Enclosures	
General	Die-cast aluminum or GRP (Glassfibre Reinforced Polyamide) enclosure with Polycarbonate window, silicone and EPDM gaskets. UV stabilized and flame retardant material.
Control Keys	Three industrial micro-switch keys. UV-resistant silicone keypad.
Painting	Aluminum enclosure only: UV-resistant 2-component industrial painting.
Panel-mount enclosures	Dimensions: 130 x 120 x 60mm (5.10" x 4.72" x 2.38") – LxHxD.
Classification	IP65 / NEMA4X
Panel cut-out	115 x 98mm (4.53" x 3.86") LxH.
Type HC	GRP panel-mount enclosure
Type HB	Aluminum panel-mount enclosure
Field/wall-mount enclosures	Dimensions: 130 x 120 x 75mm (5.10” x 4.72” x 2.95”) – LxHxD.
Classification	IP67 / NEMA4X
Aluminum enclosures	
Type HA	Drilling: 2x PG9 – 1x M20.
Type HM	Drilling: 2x M16 – 1x M20.
Type HN	Drilling: 1x M20.
Type HO	Drilling: 2x M20.
Type HP	Drilling: 6x M12.
Type HT	Drilling: 1x ½”NPT.
Type HU	Drilling: 3x ½”NPT.
Type HV	Drilling: 4x M20
Type HZ	No drilling.
GRP enclosures	
Type HD	No drilling.
Type HE	Drilling: 2x 16mm (0.63”) – 1x 20mm (0.78”).
Type HF	Drilling: 1x 22mm (0.87”).
Type HG	Drilling: 2x 20mm (0.78”).
Type HJ	Drilling: 3x 22mm (0.87”).
Type HH	Drilling: 6x 12mm (0.47”).
Type HK	Flat bottom - no drilling.
ABS enclosure	
Type HS	Silicone free ABS enclosure with EPDM and PE gaskets. UV-resistant polyester keypad. (no drilling)

Operating temperature	
Operational	-40°C to +80°C (-40°F to +176°F)
Intrinsically Safe	-40°C to +70°C (-40°F to +158°F)

Power supply	
Type PB	Lithium battery - life-time depends upon settings - up to 5 years.
Type PC	Intrinsically Safe lithium battery - life-time depends upon settings - up to 5 years.
Type PD	8-24V AC / DC ± 10%. Power consumption max. 10 Watt. Intrinsically safe: 16-30V DC; power consumption max. 0.75 Watt.
Type PF	24V AC / DC ± 10%. Power consumption max. 15 Watt.
Type PL	Input loop powered from sensor signal 4-20mA (type A, non IS).
Type PM	115-230V AC ± 10%. Power consumption max. 15 Watt.
Type PX	Output loop powered: 8-30V DC. Power consumption max. 0.5 Watt.
Note PF / PM	The total consumption of the sensors`, backlight and outputs may not exceed 400mA@24V.
Note I.S. applications	For intrinsically safe applications, consult the safety values in the certificate.

Sensor excitation	
Type PB / PC / PX	3.2V DC for pulse signals and 1.2V DC for coil pick-up. Note: This is not a real sensor supply. Only suitable for pulse sensors with a very low power consumption like coils (sine wave) and reed-switches.
Type PD	1.2 / 3.2 / 8.2 / 12 and 24V DC - max. 50mA@24V DC
Type PD-XI	Intrinsically safe: Pulse signals: 1.2 / 3.2 / 8.2 - max. 7mA@8.2V DC. Analog signals: the sensor supply voltage is according to the power supply voltage connected to terminal 1. Also terminal 2 offers the same voltage.
Type PF / PM	1.2 / 3.2 / 8.2 / 12 and 24V DC - max. 400mA@24V DC.

Terminal connections	
Type:	Removable plug-in terminal strip. Wire max. 1.5mm2 and 2.5mm2 (Type PM / PF)

Data protection	
Type	EEPROM backup of all setting. Backup of running totals every minute. Data retention at least 10 years.
Pass code	Configuration settings can be pass code protected.

Hazardous area (option)	
Intrinsically safe Type XI	ATEX approval: Ex II 1 G Ex ia IIB/IIC T4 Ga II 1 D Ex ia IIIC T100°C Da IP6x IECEx approval: Ex ia IIB/IIC T4 Ga Ex ia IIIC T100°C Da IP6x
Explosion proof Type XD/XF	ATEX approval ref.: <EX> II 2 GD EEx d IIB T5. Weight appr. 15kg. Dimensions of enclosure: 350 x 250 x 200mm (13.7” x 9.9” x 7.9”) LxHxD.

Environment	
Electromagnetic compatibility	Compliant ref: EN 61326 (1997), EN 61010-1 (1993).

INPUTS

Flowmeter	
Type P	Coil/sine wave (minimum 20mVp-p or 80mVp-p - sensitivity selectable), NPN/PNP, open collector, reed-switch, Namur, active pulse signals 8, 12 and 24V.
Frequency	Minimum 0 Hz - maximum 7 kHz for total and flowrate. Maximum frequency depends on signal type and internal low-pass filter. E.g. Reed switch with low-pass filter: max. frequency 120 Hz.
K-Factor	0.000010 - 9,999,999 with variable decimal position.
Low-pass filter	Available for all pulse signals.
Type A	(0)4-20mA - with signal calibration feature at any current within the range.
Type U	0-10 V - with signal calibration feature at any voltage within the range.
Accuracy	Resolution: 14 bit.. Error < 0.025mA / ±0.125% FS. Low level cut-off programmable.
Span	0.000010 - 9,999,999 with variable decimal position.
Update time	Four times a second.
Voltage drop	2.5 Volt.
Load impedance	3kOhm
Relationship	Linear and square root calculation.
Note	For signal type A and U: external power to sensor is required; e.g. Type PD.

Control inputs	
Function	External START and PAUSE / STOP inputs
Type P	Two Reed switch inputs / make-contacts. Minimum contact duration 100msec.

OUTPUTS

Control outputs	
Function	User defined: batch process with one stage control or two stage control.
Type OA	Two active 24V DC transistor outputs; max. 50mA per output (requires type PD, PF or PM).
Type OR	Two mechanic relay outputs; max. switch power 230V AC - 0,5A (requires type PF or PM).
Type OT	Two passive transistor outputs - not isolated. Load max. 50V DC - 300mA.

Printer output	
Functions	Printing predefined data on command.
Protocol	ASCII
Speed	1200 - 2400 - 4800 - 9600 baud
Addressing	maximum 255 addresses.
Type CB	RS232
Type CH	RS485 2-wire
Type CI	RS485 4-wire
Type CT	TTL Intrinsically Safe communication.
Type CX	no communication.

OPERATIONAL

Operator functions	
Functions	• enter a batch preset value, • manually start, pause and stop a batch • reprint last receipt.
Displayed information	• preset value; batch running or ready • handled batch quantity or remaining quantity, • total and accumulated total, • number of completed batches

Preset / Total	
Digits	7 digits
Units	L, m3, GAL, USGAL, KG, lb, bbl, no unit.
Decimals	0 - 1 - 2 or 3.
Note	can be reset to zero

Accumulated total	
Digits	11 digits
Units / decimals	identical to selection for total
Note	cannot be reset to zero

APPENDIX B: TROUBLESHOOTING

In this appendix, several troubleshooting topics are described that may arise during installation or operation.

Flowmeter does not generate pulses:
Check:
- Signal selection **SETUP** 61,
- Pulse amplitude (par. 4.4.3.),
- Flowmeter, wiring and connection of terminal connectors (par. 4.4.3.),
- Power supply of flowmeter (par. 4.4.2.).

Flowmeter generates "too many pulses":
Check:
- Settings for total: **SETUP** 11-14,
- Type of signal selected with actual signal generated - **SETUP** 61,
- Sensitivity of coil input **SETUP** 61 and par. 4.4.3.
- Proper grounding of the F132-P and flowmeter - par. 4.4.1.

Pulse output does not function:
Check:
- **SETUP** 71 - pulse per “x” quantity; is the value programmed reasonable and will the maximum output be under 20Hz?
- **SETUP** 72 - impulse width; is the external device able to recognize the selected pulse width and frequency?

The pass code is unknown:
If the pass code is not 1234, there is only one possibility left: call your supplier.

Printer does not print:
If no receipt is printed upon request (`Reprint yes / no`) or when a batch has completed, check:
- power and paper supply of printer,
- printer self test to assure its operable (see printer manual),
- communication wiring: correctly installed and power provided on terminal 27 (see section 4.4.3. Terminal 26-31)
- **SETUP** 81 baudrate: does this match the printer setting? Is the printer configured to use the serial port? (see printer manual)
- Is ASCII selected as printer protocol? (see printer manual)

ALARM
When the alarm flag starts to blink an internal alarm condition has occurred. Press the "select button" several times to display the 5-digit error code. The codes are:
0001: irrecoverable display-data error: data on the display might be corrupted.
0002: irrecoverable data-storage error: the programming cycle might have gone wrong: check programmed values.
0003: error 1 and error 2 occurred simultaneously.

The alarm condition will almost certainly be handled internally and if all mentioned values still appear correct, no intervention by the operator is needed. If the alarm occurs more often or stays active for a longer time, please contact your supplier.

INDEX OF THIS MANUAL

accumulated Total 8
active output 24
actual settings 40
alarm 9
batch maximum 8
battery life time 15, 34
Cancel 7
Clear Total 9
clock 17
Coil-signal 25
Configuration 10
Dimension enclosures 19, 20
display
  function 15
  update 15
flowmeter
  signal 16
Flowmeter input 25
Installation 18
Intrinsic safety 29
Intrinsically Safe options 31
IP classification 18
keys 7
low-battery 9
Low-battery alarm 9
main-function 11
maintenance 34
model 17
NAMUR-signal 27
no-flow alarm 9, 15
Operator level 7
overrun 15
pass code 17, 38
pause 8
power supply 23, 25
power supply intrinsically safe 31
preset
  max. batch size 14
Preset
  batch maximum 8
  enter batch value 7
printer 6, 9, 13, 16, 38
Problem solving 38
Pulse-signal active pulse 26
Pulse-signal NPN/PNP 26
Reed-switch: 27
Relay output 16, 24
serial number 17
SETUP-level 10
START 8
Start, external input 27
STOP 8
Stop, external input 28
subfunction 11
tagnumber 17
Technical specification 35
terminal connectors 23
total
  decimals 14
  decimals k-factor 14
  k-factor 14
  measuring unit 14
transistor output 24
version software 17
Voltage selection sensor 22

LIST OF CONFIGURATION SETTINGS

	DEFAULT SETTING	ENTER YOUR SETTINGS HERE	
1 - PRESET		DATE :	DATE :
11 unit	L		
12 decimals	0000000		
13 K-factor	0000001		
14 decimals K-factor	0		
15 max. batch size	0		
2 - OVERRUN			
21 overrun	disabled		
22 overrun time	0.0 sec		

3 - ALARM	DEFAULT SETTING	ENTER YOUR SETTINGS HERE	
		DATE :	DATE :
31 no-flow alarm	disabled		
32 no-flow time	10.0 sec		
4 - DISPLAY			
41 display	increase		
5 - POWER MANAGEMENT			
51 LCD-new	1 sec.		
52 mode	operational		
6 - FLOWMETER			
61 signal	coil-lo		
7 - RELAY OUTPUT			
71 relays	1-step		
72 preclose quantity	0		
8 - COMMUNICATION			
81 baud-rate	2400		
82 header	FLUIDWELL F132-P		
83 lineterm	CR/LF		
84 startrow	2		
85 endrow	2		
86 formfeed	disable		
87 dateformat	Y.M.D.		
9 – OTHERS			
91 model	F132-P	F132-P	F132-P
92 software version	02.05._____	02.05._____	02.05._____
93 serial number	_ _ _ _ _ _ _	_ _ _ _ _ _ _	_ _ _ _ _ _ _
94 time	00:00:00		
95 date	01:01:01		
96 pass code	0000		
97 tagnumber	0000000		

Fluidwell bv
PO box 6
5460 AA Veghel
The Netherlands

Voltaweg 23
5466 AZ Veghel
The Netherlands

Website: www.fluidwell.com
Find your nearest representative: www.fluidwell.com/representatives
Copyright Fluidwell bv - 2012 - HF110AEN_v0501_03